Airwell Residential

AIRWELL ■ ELECTRA ■ JOHNSON

Airwell

Service Manual

HDDE009/012/018/024

Indoor Units	Outdoor Units
AWSI-HDDE009-H11	AWAU-YDDE009-H11
AWSI-HDDE012-H11	AWAU-YDDE012-H11
AWSI-HDDE018-H11	AWAU-YDDE018-H11
AWSI-HDDE024-H11	AWAU-YDDE024-H11

REFRIGERANT

R410A

HEAT PUMP

SM HDDE 1-A.1 GB

MAY-2013

Version:1

LIST OF EFFECTIVE PAGES

Note: Changes in the pages are indicated by a “Revision#” in the footer of each effected page (when none indicates no changes in the relevant page). All pages in the following list represent effected/ non effected pages divided by chapters.

Dates of issue for original and changed pages are:

Original ..... 01 ..... 22-May-2013

Total number of pages in this publication is **74** consisting of the following:

Page No.	Revision No. #	Page No.	Revision No. #	Page No.	Revision No. #

* Zero in this column indicates an original page.

Table of Contents

1. INTRODUCTION

1.1 General

HDDE series is a mono-split DCI inverter air conditioner. This high-wall mounted type indoor are mainly designed for residential buildings.

The ODU YDDE product is a DC inverter outdoor with high technology**.** By using DC compressor sine wave torque control technology, this product provides more comfort and economical operating.

The whole series includes 4 models 09/12/18/24 in cooling capacity.

1.2 Main Features

The unit benefits from the most advanced technological innovations, namely:

- DC inverter technology.
- R410A models
- Microprocessor control and indoor LED display
- High SEER/SCOP , A/A level with Average climate.
- Torque control for compressor running in lower Frequency but with low vibration and little sound.
- Max allowing tubing distance of 25m(Model HDDE024).
- Up to 10 m vertical high between indoor and outdoor units
- Cooling operation at outdoor temperature up to 46ºC.
- Heating operation at outdoor temperature down to -15ºC.
- Easy installation and service.
- Sleep mode from remote control to save energy
- ON/OFF timer and clock display
- Vertical auto swing with motorized flap (any position stop)
- Intelligent Deicing
- Memory from power failure
- Rapid cooling/heating
- I-Feel function
- Cold air prevention in heating
- Clean function (Blow dry)
- Self diagnostic (Error indications) for ease of maintenance

1.3 Indoor Unit

The indoor unit is wall mounted, and can be easily fitted to many types of residential locations. It includes:

- LED display
- Variable speed with PG motor
- Motorized flap
- High efficiency filtration to ensure a best Air Quality : Advanced filtering combine mechanical, Photo-catalytic + Bi-anti bacterial and observe bad gaseous and smokes.

1.4 Control

The microprocessor indoor controller, and an infrared remote control, supplied as standard, provide complete operating function and programming.

Remote control RC 8A：
Compact and economically design, it offers excellent user comfort. Combining modern design with high technology, the RC8A remote control offers powerful functions of real considering of user comfort and energy saving of air-conditioner.

For detail of functions, please refer to Appendix 1

1.5 Outdoor Unit

The outdoor units can be installed as floor or wall mounted units by using a wall supporting bracket. The metal sheets are protected by anti- corrosion paintwork allowing long life resistance. All outdoor units are pre-charged. For further information please refer to the Product Data Sheet, Chapter 2.
It includes:

- Compressor mounted in a soundproofed compartment :
- Axial fan.
- Outdoor coil with hydrophilic louver fins for RC units.
- Outlet air fan grill.
- Interconnecting wiring terminal block.

1.6 Tubing Connections

Flare type interconnecting tubing to be produced on site.
For further details please refer to the Installation Manual.

1.7 Inbox Documentation

Each unit is supplied with its own installation, operation and remote control manuals.

1.8 Matching Table

OUTDOOR UNITS	INDOOR UNITS			
	 AWSI-HDDE009-H11	 AWSI-HDDE012-H11	 AWSI-HDDE018-H11	 AWSI-HDDE024-H11
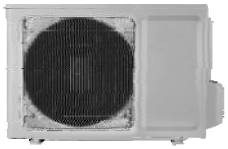 AWAU-YDDE009-H11	✓			
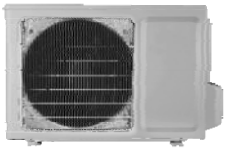 AWAU-YDDE012-H11		✓		
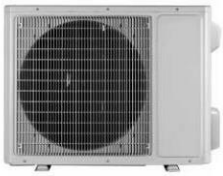 AWAU-YDDE018-H11			✓	
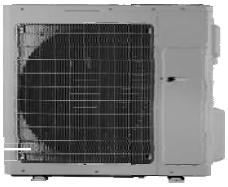 AWAU-YDDE024-H11				✓

2. PRODUCT DATA SHEET

Model Indoor Unit				AWAU-HDDE009-N11		
Model Outdoor Unit				AWAU-YDDE009-H11		
Installation Method of Pipe				Flared		
Characteristics			**Units**	**Cooling**	**Heating**	
					Average	**Warmer**
Capacity (1)			kW	2,6 (0,45-3,23)	3,0 (0,45-4,1)	
Pdesign			kW	2,6	2,6	2,8
SEER / SCOP (2)			W/W	5,6	3,8	4,4
Energy efficiency class				A+	A	A+
Annual energy consumption			kWh	163	958	891
Tbiv			°C	N/A	-7	??
Tol			°C	N/A	-15	-10
Power supply			V/Ph/Hz	220-240V/Single/50Hz		
Circuit breaker rating			A	16		
INDOOR	Fan type & quantity			Cross flow fan x1		
	Fan speeds	H/M/L	RPM	1350/1100/900/700	1350/1140/980/820	
	Air flow (3)	H/M/L	m3/hr	600/520/370/280	600/520/370/280	
	External static pressure	Min-Max	Pa	0		
	Sound power level (4)	H/M/L	dB(A)	55/48/40/34		
	Sound pressure level (5)	H/M/L	dB(A)	43/38/30/24		
	Moisture removal		l/hr	0,8		
	Condensate drain tube I.D		mm	16		
	Dimensions	WxHxD	mm	770x283x201		
	Weight		kg	8		
	Package dimensions	WxHxD	mm	855x280x360		
	Packaged weight		kg	11		
	Units per pallet		units	21 units per pallet		
	Stacking height		units	7 levels		
OUTDOOR	Refrigerant control			EEV		
	Compressor type, model			Rotary DC Inverter		
	Fan type & quantity			Axial x 1		
	Fan speeds	H/L	RPM	850		
	Air flow	H/L	m3/hr	1800		
	Sound power level(4)	H/L	dB(A)	62		
	Sound pressure level(5)	H/L	dB(A)	51		
	Dimensions	WxHxD	mm	776x540x320		
	Weight		kg	36		
	Package dimensions	WxHxD	mm	851x595 x363		
	Packaged weight		kg	41		
	Units per pallet		Units	9 units per pallet		
	Stacking height		units	3 levels		
	Refrigerant type			R410A		
	Refrigerant charge (standard connecting tubing length)		kg(5m)	0.8		
	Additional charge per 1 meter		gr / 1m	5m<L<15m 20g/m		
	Connections between units	Liquid line	In.(mm)	1/4"(6.35)		
		Suction line	In.(mm)	3/8"(9.53)		
		Max.tubing length	m.	Max.15		
		Max.height difference	m.	Max.10		
Operation control type				Remote control		
Heating elements			kW			
Others						

(1) Rating conditions in accordance with ISO 5151 and ISO 13253 (for ducted units).

(2) SEER / SCOP calculation accordance with EN14825.

Model Indoor Unit				AWAU-HDDE012-N11		
Model Outdoor Unit				AWAU-YDDE012-H11		
Installation Method of Pipe				Flared		
Characteristics			**Units**	**Cooling**	**Heating**	
					Average	**Warmer**
Capacity [1]			kW	3,5 (0,6-3,96)	3,8 (0,6-5,13)	
Pdesign			kW	3,5	2,7	3,5
SEER / SCOP [2]			W/W	5,1	3,8	4,2
Energy efficiency class				A	A	A+
Annual energy consumption			kWh	240	995	1149
Tbiv			°C	N/A	-7	??
Tol			°C	N/A	-15	-10
Power supply			V/Ph/Hz	220-240V/Single/50Hz		
Circuit breaker rating			A	16		
INDOOR	Fan type & quantity			Cross flow fan x1		
	Fan speeds	H/M/L	RPM	1350/1150/950/750	1350/1190/1020/850	
	Air flow [3]	H/M/L	m3/hr	680/560/410/300	680/560/410/300	
	External static pressure	Min-Max	Pa	0		
	Sound power level [4]	H/M/L	dB(A)	56/49/41/35		
	Sound pressure level [5]	H/M/L	dB(A)	44/39/31/25		
	Moisture removal		l/hr	1,4		
	Condensate drain tube I.D		mm	16		
	Dimensions	WxHxD	mm	770x283x201		
	Weight		kg	9		
	Package dimensions	WxHxD	mm	855x280x360		
	Packaged weight		kg	12		
	Units per pallet		units	21 units per pallet		
	Stacking height		units	7 levels		
OUTDOOR	Refrigerant control			EEV		
	Compressor type, model			Rotary DC Inverter		
	Fan type & quantity			Axial x 1		
	Fan speeds	H/L	RPM	900		
	Air flow	H/L	m3/hr	1800		
	Sound power level[4]	H/L	dB(A)	62		
	Sound pressure level[5]	H/L	dB(A)	53		
	Dimensions	WxHxD	mm	848x540x320		
	Weight		kg	40		
	Package dimensions	WxHxD	mm	881x595 x363		
	Packaged weight		kg	45		
	Units per pallet		Units	9 units per pallet		
	Stacking height		units	3 levels		
	Refrigerant type			R410A		
	Refrigerant charge (standard connecting tubing length)		kg(5m)	1.0		
	Additional charge per 1 meter		gr / 1m	5m<L<20m 20g/m		
	Connections between units	Liquid line	In.(mm)	1/4"(6.35)		
		Suction line	In.(mm)	3/8"(9.53)		
		Max.tubing length	m.	Max.20		
		Max.height difference	m.	Max.10		
Operation control type				Remote control		
Heating elements			kW			
Others						

(1) Rating conditions in accordance with ISO 5151 and ISO 13253 (for ducted units).

(2) SEER / SCOP calculation accordance with EN14825.

Model Indoor Unit				AWAU-HDDE018-N11		
Model Outdoor Unit				AWAU-YDDE018-H11		
Installation Method of Pipe				Flared		
Characteristics			**Units**	**Cooling**	**Heating**	
					Average	**Warmer**
Capacity (1)			kW	5,3 (1,2-6,3)	5,6 (1,1-6,4)	
Pdesign			kW	5,3	4,8	5,3
SEER / SCOP (2)			W/W	5,4	3,8	4,6
Energy efficiency class				A	A	A++
Annual energy consumption			kWh	345	1768	1611
Tbiv			°C	N/A	-7	??
Tol			°C	N/A	-15	-10
Power supply			V/Ph/Hz	220-240V/Single/50Hz		
Circuit breaker rating			A	25		
INDOOR	Fan type & quantity			Cross flow fan x1		
	Fan speeds	H/M/L	RPM	1350/1100/950/800	1400/1200/1050/900	
	Air flow (3)	H/M/L	m3/hr	800/680/560/460	800/680/560/460	
	External static pressure	Min-Max	Pa	0		
	Sound power level (4)	H/M/L	dB(A)	60/55/51/46		
	Sound pressure level (5)	H/M/L	dB(A)	49/44/40/35		
	Moisture removal		l/hr	1,8		
	Condensate drain tube I.D		mm	16		
	Dimensions	WxHxD	mm	865x305x215		
	Weight		kg	12		
	Package dimensions	WxHxD	mm	948x310x383		
	Packaged weight		kg	15		
	Units per pallet		units	18 units per pallet		
	Stacking height		units	6 levels		
OUTDOOR	Refrigerant control			Capillary		
	Compressor type, model			Twin Rotary DC Inverter		
	Fan type & quantity			Axial x 1		
	Fan speeds	H/L	RPM	750		
	Air flow	H/L	m3/hr	3200		
	Sound power level(4)	H/L	dB(A)	65		
	Sound pressure level(5)	H/L	dB(A)	55		
	Dimensions	WxHxD	mm	955x700x396		
	Weight		kg	46		
	Package dimensions	WxHxD	mm	1029x750x458		
	Packaged weight		kg	50		
	Units per pallet		Units	6 units per pallet		
	Stacking height		units	2 levels		
	Refrigerant type			R410A		
	Refrigerant charge (standard connecting tubing length)		kg(5m)	1.3		
	Additional charge per 1 meter		gr / 1m	5m<L<25m 20g/m		
	Connections between units	Liquid line	In.(mm)	1/4"(6.35)		
		Suction line	In.(mm)	1/2"(12.7)		
		Max.tubing length	m.	Max.25		
		Max.height difference	m.	Max.10		
Operation control type				Remote control		
Heating elements			kW			
Others						

(1) Rating conditions in accordance with ISO 5151 and ISO 13253 (for ducted units).

(2) SEER / SCOP calculation accordance with EN14825.

Model Indoor Unit				AWAU-HDDE024-N11		
Model Outdoor Unit				AWAU-YDDE024-H11		
Installation Method of Pipe				Flared		
Characteristics			**Units**	**Cooling**	**Heating**	
					Average	**Warmer**
Capacity (1)			kW	6,45 (2,53-6,55)	7,0 (2,53-7,6)	
Pdesign			kW	6,45	5,8	6,2
SEER / SCOP (2)			W/W	5,4	3,8	4,6
Energy efficiency class				A	A	A++
Annual energy consumption			kWh	439	2137	1852
Tbiv			°C	N/A	-7	??
Tol			°C	N/A	-15	-10
Power supply			V/Ph/Hz	220-240V/Single/50Hz		
Circuit breaker rating			A	25		
INDOOR	Fan type & quantity			Cross flow fan x1		
	Fan speeds	H/M/L	RPM	1350/1150/950/850	1400/1200/1000/900	
	Air flow (3)	H/M/L	m3/hr	1000/800/700/550	1000/800/700/550	
	External static pressure	Min-Max	Pa	0		
	Sound power level (4)	H/M/L	dB(A)	63/57/52/49		
	Sound pressure level (5)	H/M/L	dB(A)	51/47/42/39		
	Moisture removal		l/hr	2		
	Condensate drain tube I.D		mm	16		
	Dimensions	WxHxD	mm	1008X319X221		
	Weight		kg	14,5		
	Package dimensions	WxHxD	mm	1076X328 X398		
	Packaged weight		kg	17,5		
	Units per pallet		units	18 units per pallet		
	Stacking height		units	6 levels		
OUTDOOR	Refrigerant control			Capillary		
	Compressor type, model			Twin Rotary DC Inverter		
	Fan type & quantity			Axial x 1		
	Fan speeds	H/L	RPM			
	Air flow	H/L	m3/hr	4000		
	Sound power level(4)	H/L	dB(A)	68		
	Sound pressure level(5)	H/L	dB(A)	58		
	Dimensions	WxHxD	mm	980X790X427		
	Weight		kg	55,5		
	Package dimensions	WxHxD	mm	1083X488X855		
	Packaged weight		kg	60,5		
	Units per pallet		Units	6 units per pallet		
	Stacking height		units	2 levels		
	Refrigerant type			R410A		
	Refrigerant charge (standard connecting tubing length)		kg(5m)	1.8		
	Additional charge per 1 meter		gr / 1m	5m<L<25m 50g/m		
	Connections between units	Liquid line	In.(mm)	1/4"(6.35)		
		Suction line	In.(mm)	5/8"(15.88)		
		Max.tubing length	m.	Max.25		
		Max.height difference	m.	Max.10		
Operation control type				Remote control		
Heating elements			kW			
Others						

(1) Rating conditions in accordance with ISO 5151 and ISO 13253 (for ducted units).

(2) SEER / SCOP calculation accordance with EN14825.

3. RATING CONDITIONS

Rating conditions in accordance with ISO 5151 and ISO 13253 (for ducted units).

Cooling:
Indoor: 27°C DB 19°C WB
Outdoor: 35 °C DB

Heating:
Indoor: 20°C DB
Outdoor: 7°C DB 6°C WB

3.1 Operating Limits

R410A

		Indoor	Outdoor
Cooling	Upper limit	32°C DB 23°C WB	46°C DB
	Lower limit	21°C DB 15°C WB	10°C DB (HDDE009/012) 5°C DB (HDDE018/024)
Heating	Upper limit	27°C DB	24°C DB 18°C WB
	Lower limit	10°C DB	-15°C DB -16°C WB
Voltage		1-PH 50Hz 198 – 264 V	

4. OUTLINE DIMENSION

4.1 Indoor: HDDE009, HDDE012, HDDE018, HDDE024

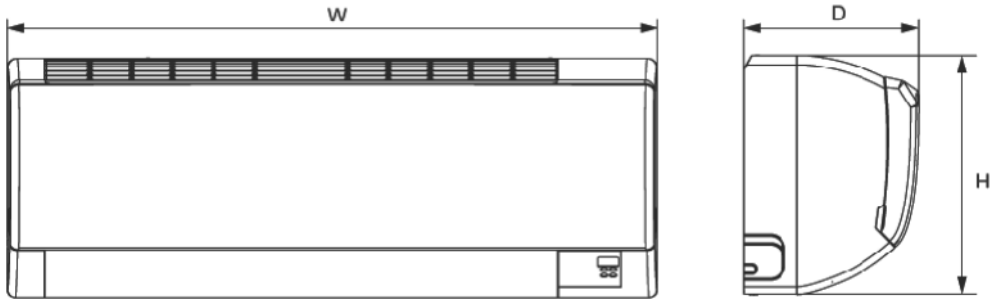

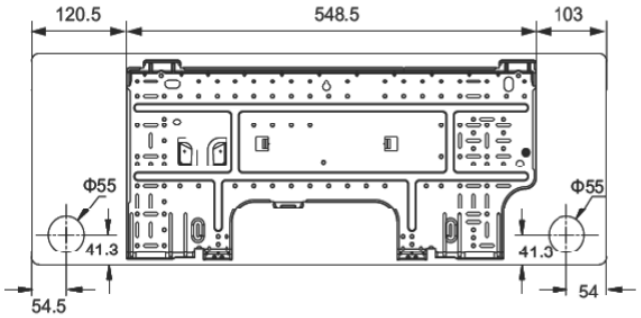

09&12K Unit

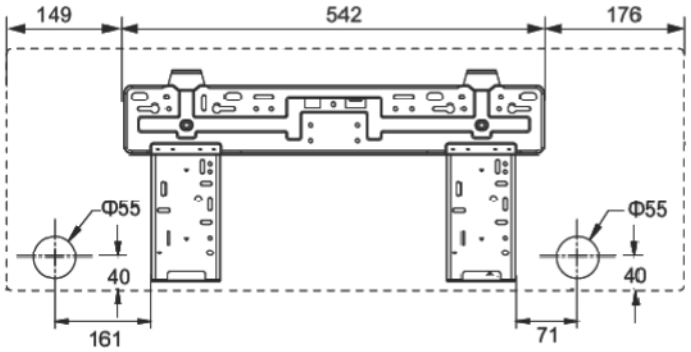

18K Unit

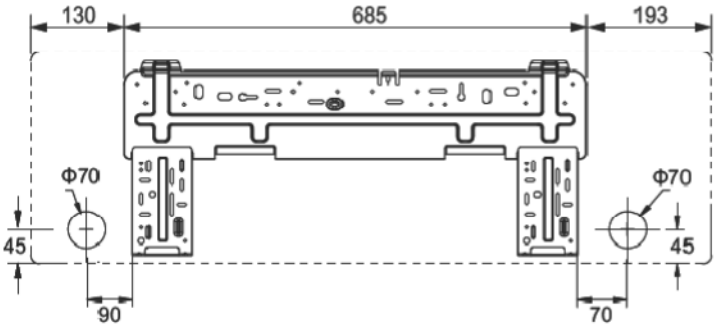

24K Unit

Models	W	H	D
HDDE009/012	770	283	201
HDDE018	867	305	215
HDDE024	1008	319	221

4.2 Outdoor: YDDE009

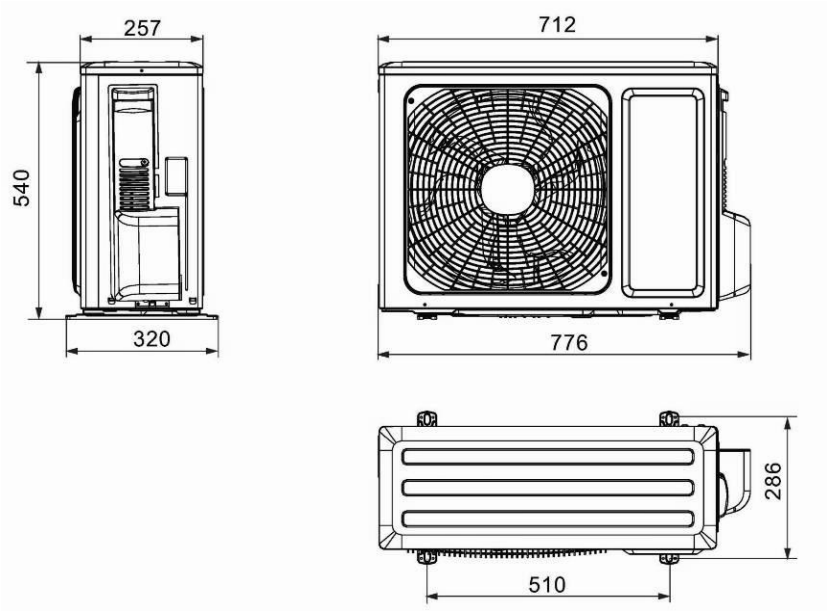

4.3 Outdoor: YDDE012

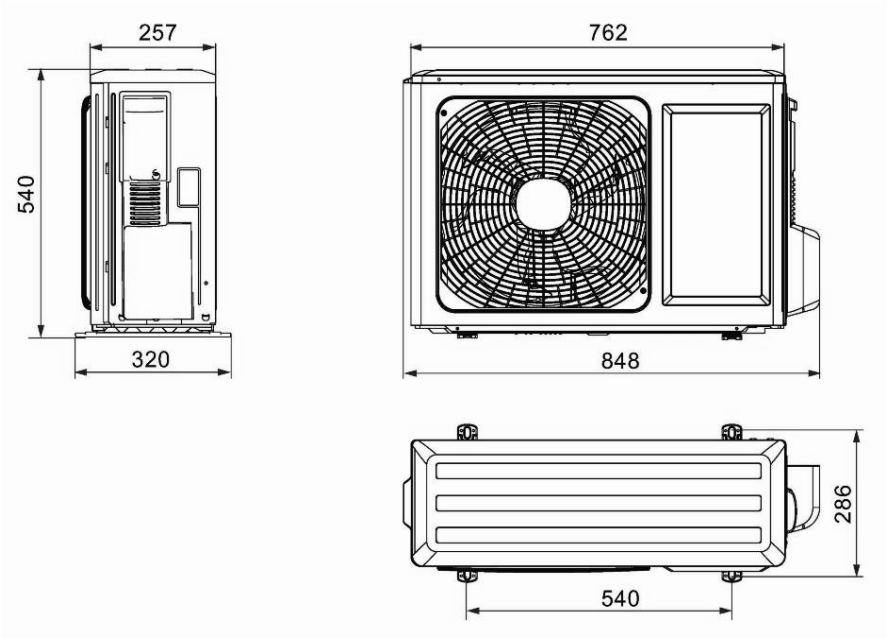

4.4 Outdoor: YDDE018

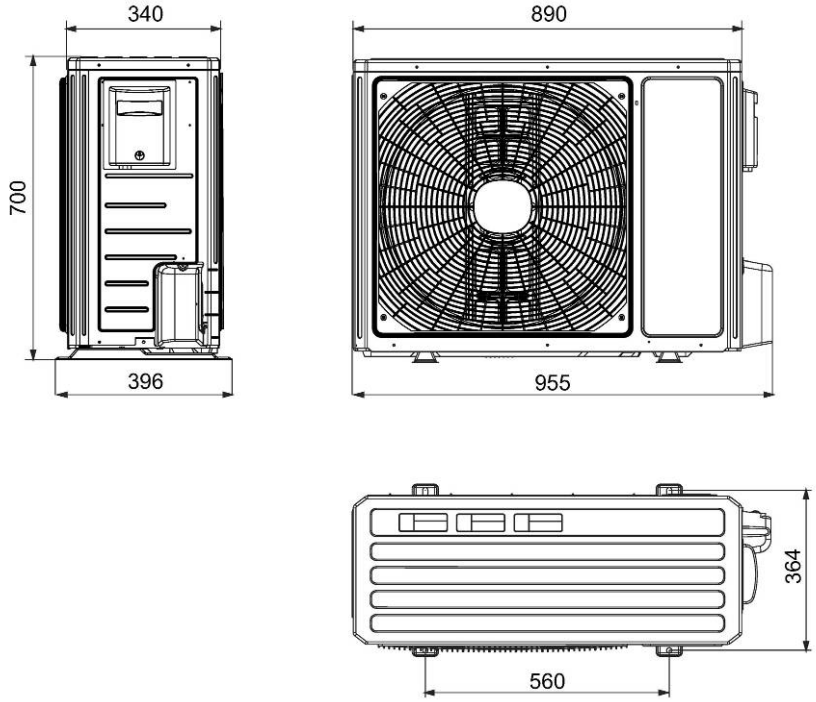

4.5 Outdoor: YDDE024

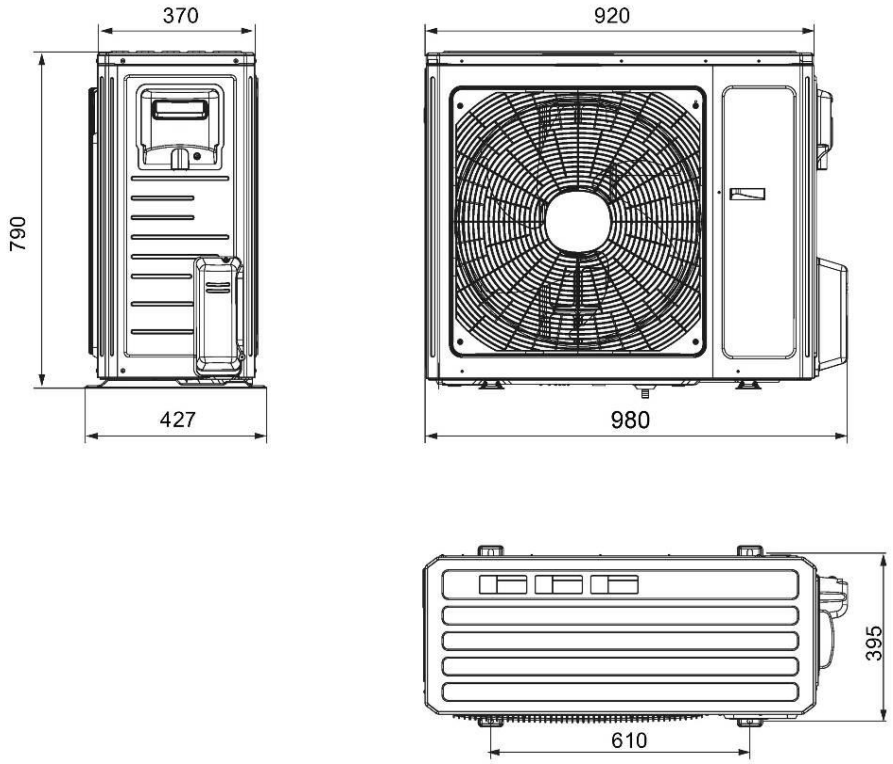

5. PERFORMANCE DATA

6. PRESSURE CURVES

7. SOUND LEVEL CHARACTERISTICS

7.1 Sound Pressure Level

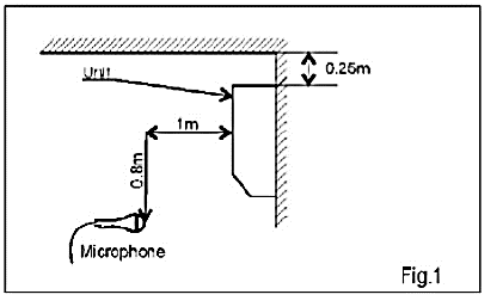

Figure 1. Wall Mounted

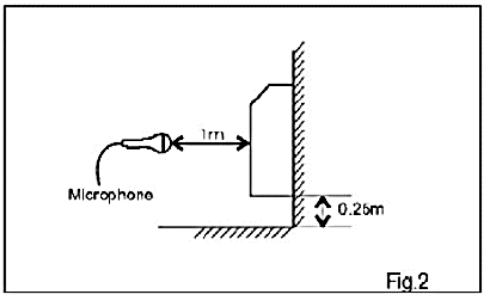

Figure 2. Floor Mounted

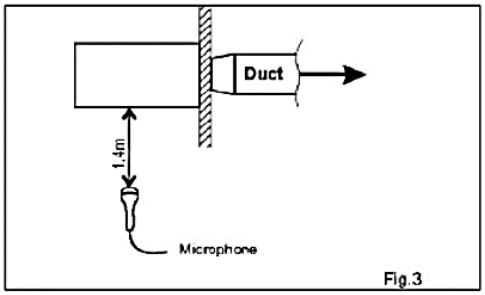

Figure 3. Ducted

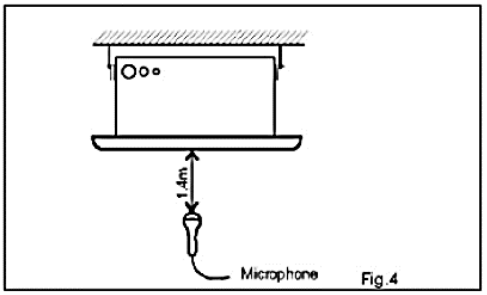

Figure 4. Cassette

7.2 **Sound Pressure Level Spectrum** (Measured as Figure 1)

8. ELECTRICAL DATA

MODEL	YDDE009	YDDE012	YDDE018	YDDE024
Power Supply	To indoor			
	1PH-220-240V-50Hz			
Max Current, A	6.9A	7.3A	11.8A	12.4A
Circuit Breaker,A	16A	16A	25A	25A
Power Supply Wiring No. X Cross Section mm^2	3x1.5 mm^2	3x1.5 mm^2	3x2.5 mm^2	3x2.5 mm^2
Interconnecting Cable Model No. X Cross Section mm^2	4x1.5 mm^2	4x1.5 mm^2	4x2.5 mm^2	4x2.5 mm^2

NOTE

Power wiring cord should comply with local laws and electrical regulations requirements.

9. WIRING DIAGRAM

9.1 HDDE009, HDDE012

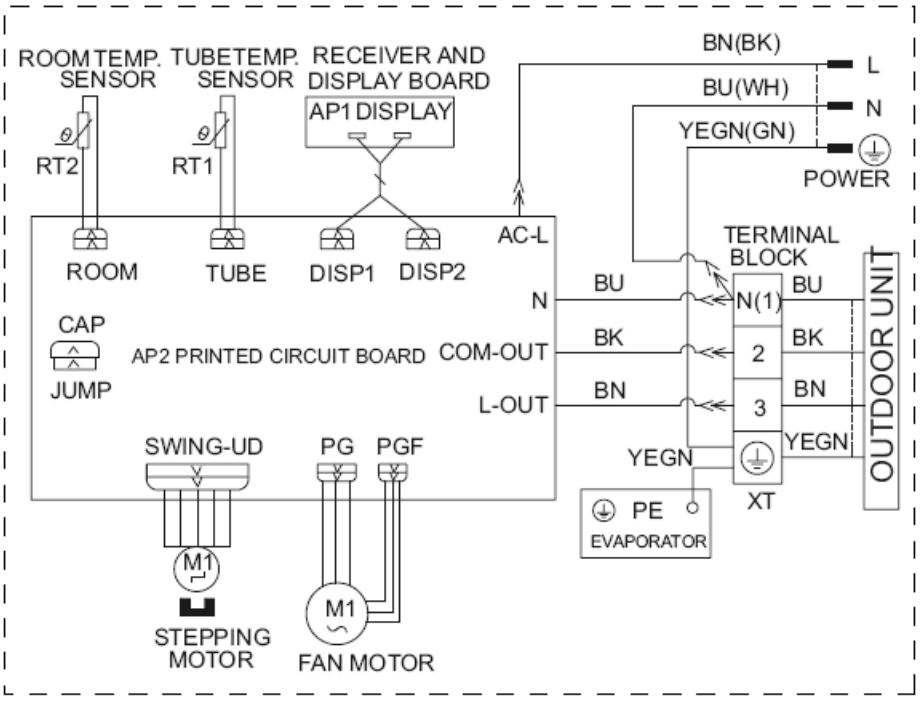

9.2 HDDE018

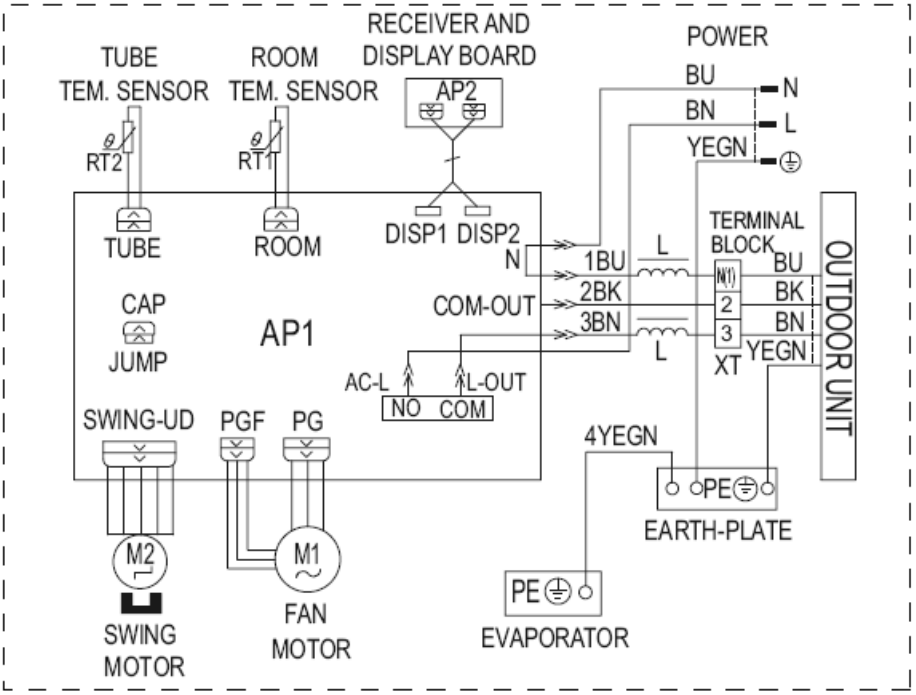

9.3 HDDE024

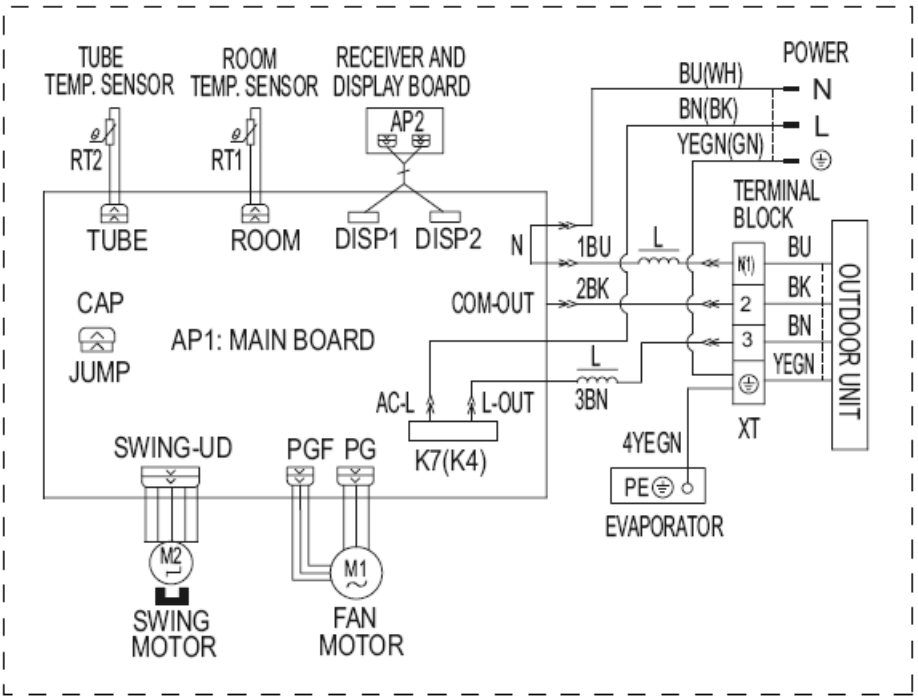

9.4 YDDE009

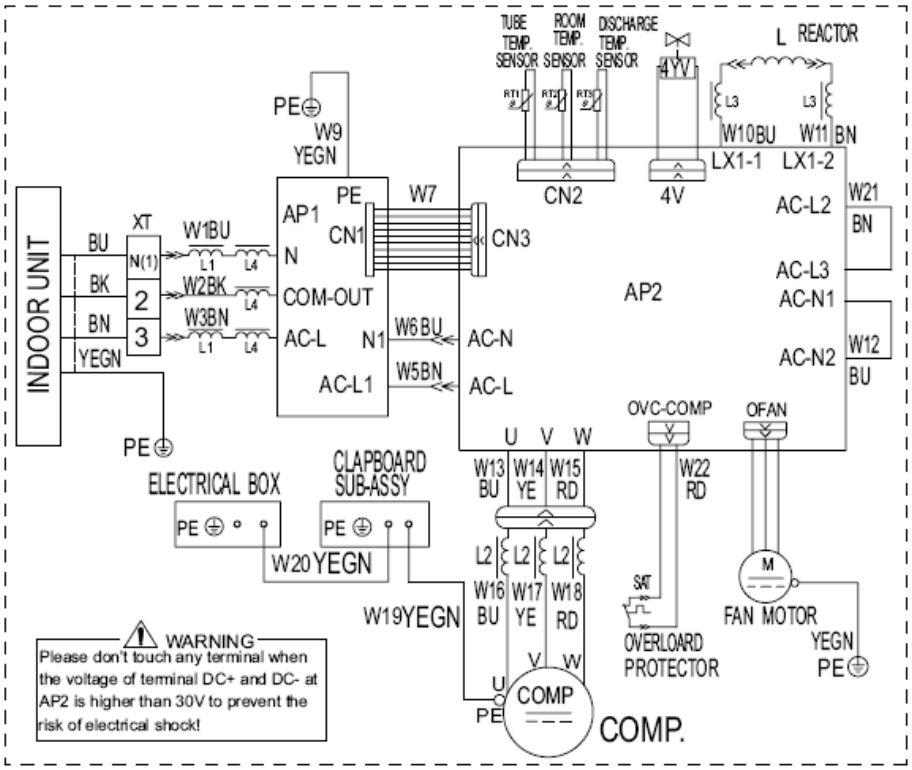

9.5 YDDE012

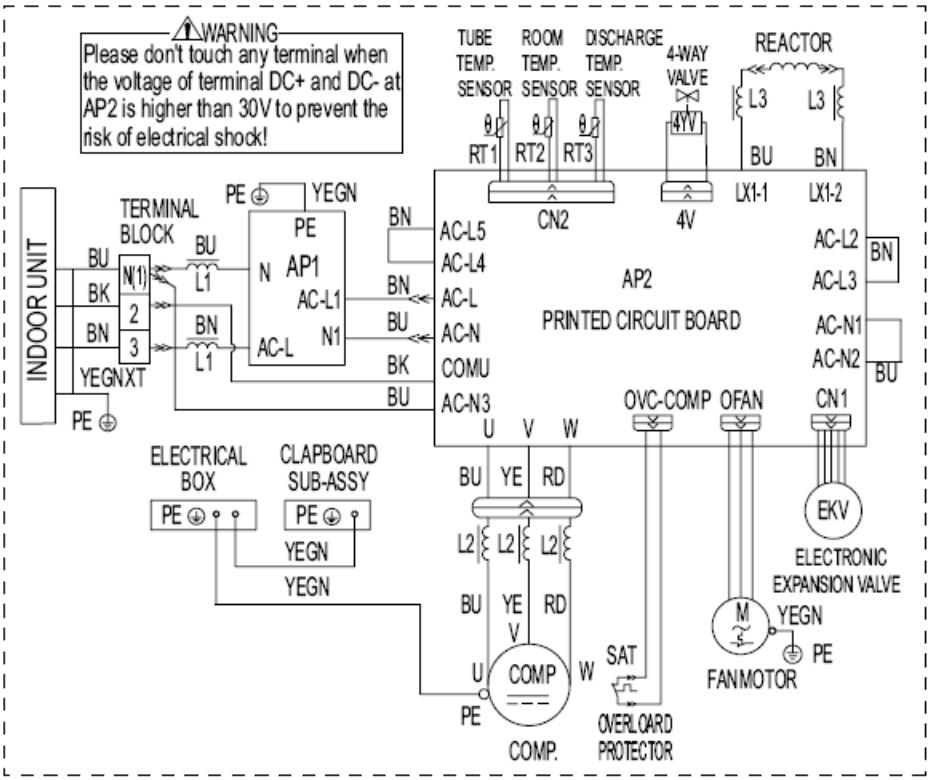

9.6 YDDE018,YDDE024

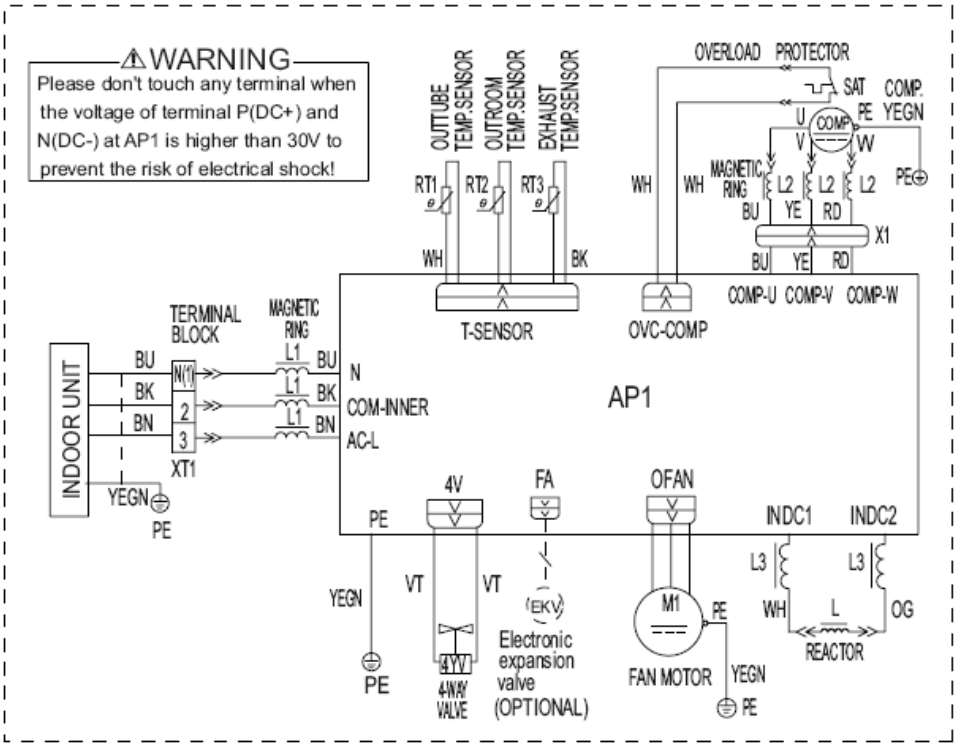

10. REFRIGERATION DIAGRAMS

10.1 HDDE009+YDDE009, HDDE012+YDDE012

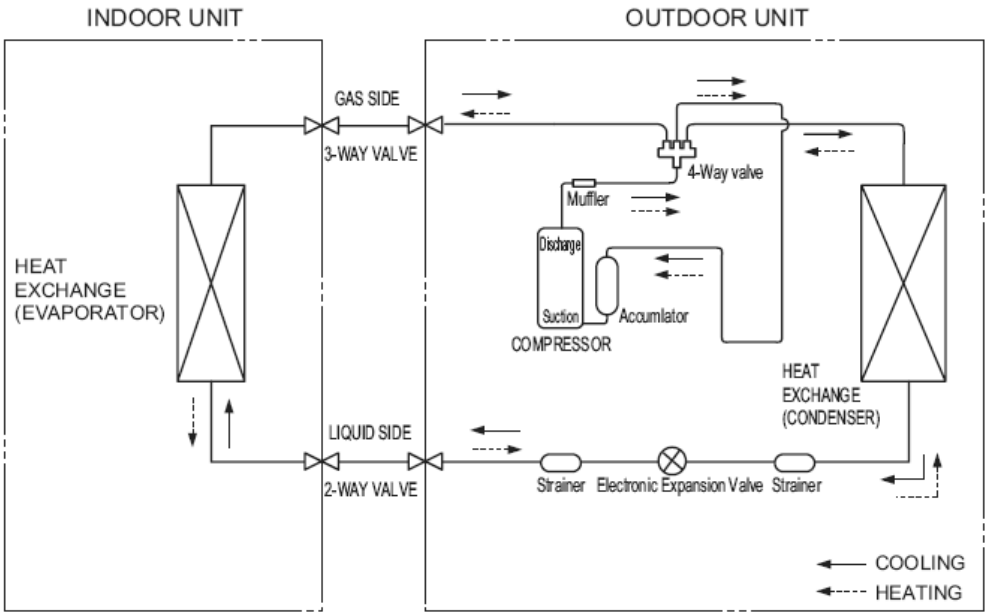

Refrigerant pipe diameter
Liquid :1/4" (6 mm)
Gas : 3/8" (9.52 mm)

10.2 HDDE018+YDDE018, HDDE024+YDDE024

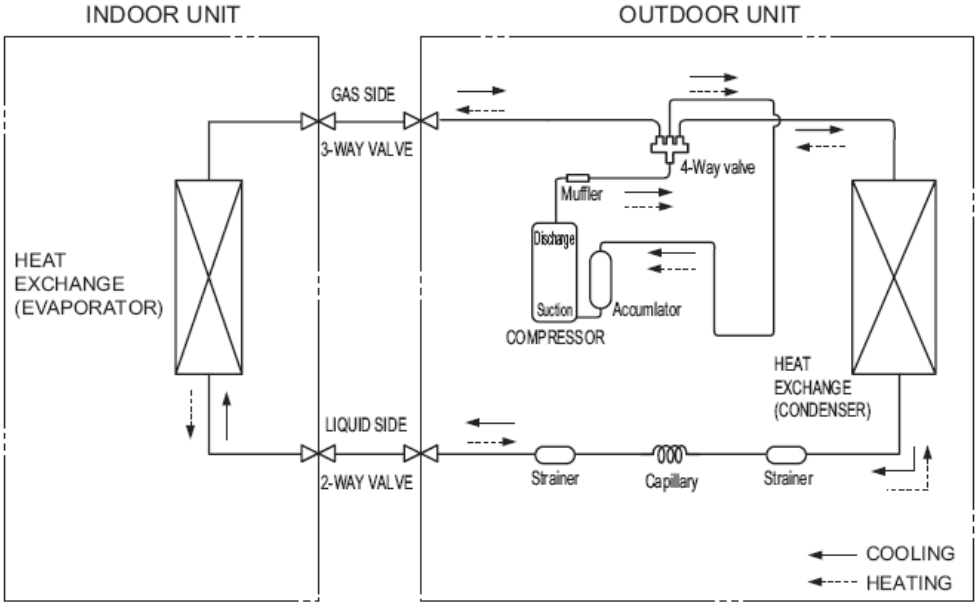

Refrigerant pipe diameter
Liquid :1/4" (6 mm)
Gas : 1/2" (12 mm)(18K Unit)
Gas : 5/8" (16 mm)(24K Unit)

11. TUBING CONNECTIONS

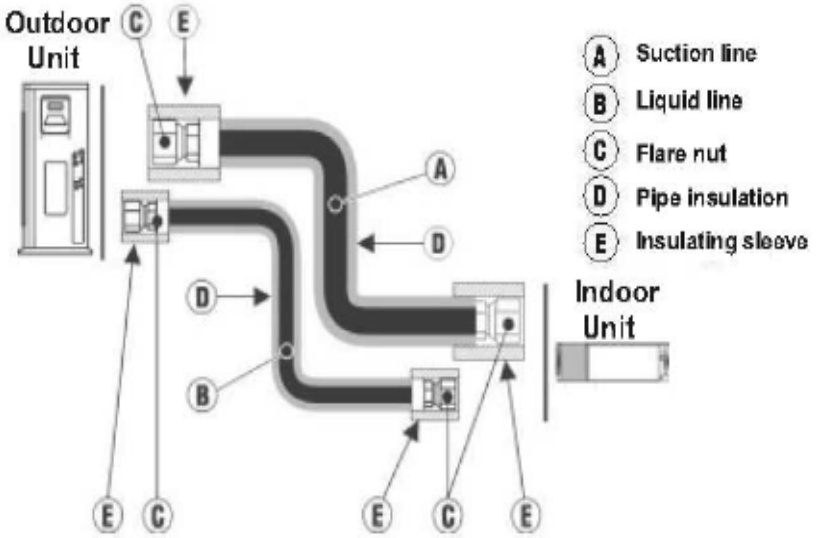

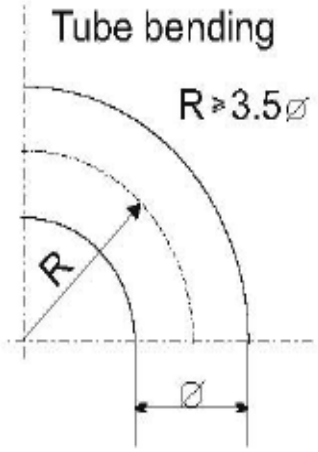

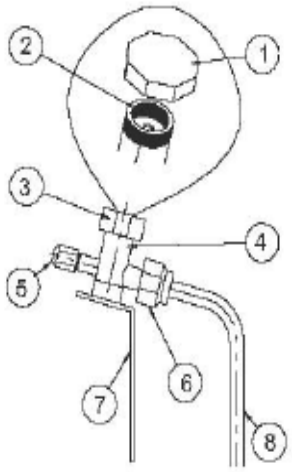

TUBE (Inch) / TORQUE (Nm)	1/4"	3/8"	1/2"	5/8"	3/4"
Flare Nuts	15-18	40-45	60-65	70-75	80-85
Valve Cap	13-20	13-20	18-25	18-25	40-50
Service Port Cap	11-13	11-13	11-13	11-13	11-13

1. Valve Protection Cap-end
2. Refrigerant Valve Port (use Allen wrench to open/close)
3. Valve Protection Cap
4. Refrigerant Valve
5. Service Port Cap
6. Flare Nut
7. Unit Back Side
8. Copper Tube

When the outdoor unit is installed above the indoor unit an oil trap is required every 5m along the suction line at the lowest point of the riser. In case the indoor unit is installed above the outdoor, no trap is require

12. CONTROL SYSTEM

12.1 Electronic Control

12.1.1 Abbreviations

Abbreviation	Definition
A/C	Air Condition
BMS	Building Management System
PWR	System Power
CTT	Compressor Top Temperature sensor
DCI	DC Inverter
EEV	Electronic Expansion Valve
HE	Heating Element
HMI	Human Machine Interface
HST	Heat Sink Temperature sensor
Hz	Hertz (1/sec) – electrical frequency
ICT	Indoor Coil Temperature (RT2) sensor
IDU	Indoor Unit
MCU	Micro Controller Unit
OAT	Outdoor Air Temperature sensor
OCT	ODU Coil Temperature sensor
ODU	Outdoor Unit
OFAN	Outdoor Fan
PFC	Power Factor Corrector
RAC	Residential A/C
RAT	Room Air Temperature sensor
RC	Reverse Cycle (Heat Pump)
RCT	Remote Control Temperature sensor
RGT	Return Gas Temperature sensor
RPS	Rounds per second (mechanical speed)
RV	Reverse Valve
SB,STBY	Stand By
SUCT	Compressor Suction Temperature sensor
S/W	Software
TBD	To Be Defined
TMR	Timer

12.1.2 System Operation Concept

The control function is divided between indoor and outdoor unit controllers. Outdoor unit is the system ‘Master’, requesting the indoor unit for cooling/heating capacity supply. The indoor unit is the system ‘Slave’ and it must supply the required capacity unless it enters into a protection mode avoiding it from supplying the requested capacity.

Target frequency is transferred via indoor to outdoor communication, and the calculation is based on room temperature and set point temperature.

12.1.3 Compressor Frequency Control

The Compressor Frequency Control is based on the PI scheme.

When starting the compressor, or when conditions are varied due to the change of the room condition, the frequency must be initialized according to the **ΔD** value of the indoor unit and the **Q** value of the indoor unit.
Q value: Indoor unit output determined from indoor unit capacity, air flow rate and other factors.

1. P control
Calculate **ΔD** value in each sampling time (20 seconds), and adjust the frequency according to its difference from the frequency previously calculated.
2. I control
If the operating frequency is not change more than a certain fixed time, adjust the frequency up and down according to the **ΔD** value.
Obtaining the fixed **ΔD** value
When the **ΔD** value is small- decrease the frequency
When the **ΔD** value is large- increase the frequency
3. Frequency management when other controls are functioning
When frequency is drooping;
Frequency management is carried out only when the frequency droops.
For limiting lower limit
Frequency management is carried out only when the frequency rises.
4. Maximum and minimum limits of frequency by PI control
The frequency upper and lower limits are set depending on indoor unit.
When low noise commands come from the indoor unit or when outdoor unit low noise or quiet commands come from indoor unit, the upper limit frequency must be lowered than the usual setting. (see 12.1.3.1)

12.1.3.1 Frequancy range

The compressor frequency limitation is set by the following table

Mode	Minimum Frequency(MinFreq)				Maximum Frequency(MaxFreq)			
	09	12	18	24	09	12	18	24
Cooling	*TBC*	*TBC*	*TBC*	*TBC*	*TBC*	*TBC*	*TBC*	*TBC*
Heating	*TBC*	*TBC*	*TBC*	*TBC*	*TBC*	*TBC*	*TBC*	*TBC*

12.1.5.1 Frequency Changes Control

Frequency change rate is 1 Hz/sec.

12.1.5.2 Compressor Starting Control

When turning the compressor from OFF to ON, the upper limit of frequency must be set as follows. (The function must not be used when defrosting.)

FCG3	88
FCG2	64
FCG1	48
TCG1	240
TCG2	360
TCG3	180

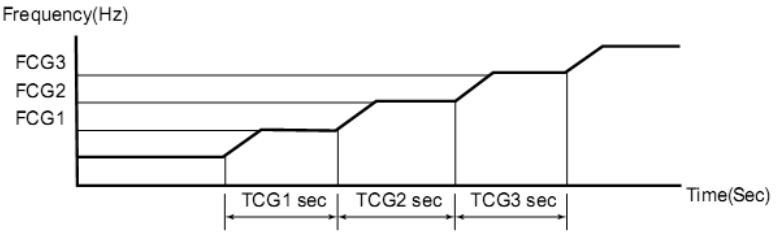

12.1.5.3 Minimum On and Off Time

Prohibit to turn ON the compressor for 3 minutes after turning it off.(except during deicing protection)

12.1.6 Indoor Fan Control

8 Indoor fan speeds are determined for each model. 4 speeds for COOL modes and 4 speeds for HEAT mode.

Unit Model	Mode	Turbo (Super high)	High	Medium	Low
09	Cooling	1350	1100	900	700
	Heating	1350	1140	980	820
12	Cooling	1350	1150	950	750
	Heating	1350	1190	1020	850
18	Cooling	1350	1100	950	800
	Heating	1400	1200	1050	900
24	Cooling	1350	1150	950	850
	Heating	1450	1200	1000	900

In high/ medium/ low indoor fan user setting, unit will operate fan in selected speed.

In AutoFan user setting, fan speed will be adjusted automatically according to the difference between actual room temperature (RAT) and user set point temperature (SPT).

Indoor Fan speed		High	Medium	Low
RAT-SPT	Cooling	>=2	(0,2)	<=0
	Heating	<=1	(1,3)	>=3

In DRY mode, the automatic fan speed is forced to be low.

12.1.6.1 Turbo Speed

In COOL and HEAT mode (not available in AUTO, DRY, FAN mode), press the Turbo button, the super high fan speed is selected on Remote control and the indoor fan rotates at super high speed.

12.1.7 Outdoor Fan Control

12.1.7.1 FAN Speed Type

The outdoor fan motor is a one speed AC motor and controlled by the relay on outdoor controller.

12.1.7.2 General rules

1. The outdoor fan is ON when compressor ON during cooling, dring and heating mode.
2. Outdoor fan OFF will delay 30sec when compressor is OFF during cooling and heating mode.
3. Outdoor fan control under outdoor deicing please refer to 12.11.6

12.1.8 Refrigerant control

12.1.8.1 EEV was used in model 09 and 12

1. EEV operation after power-on: When power on, EEV will open 240 steps and then move back with 540steps. This position will be recognized as 0. Then EEV will open to 480 steps and be ready for system operating.
2. EEV open loop: depends on OAT,RAT,SPT and compressor frequency after compressor starts to operate.
3. Target CTT control: will be performed after compressor operates for 5min.The EEV opening will be updated every 5s.

12.1.8.2 Capiliary is used in model 18 and 24

12.1.9 Reversing Valve (RV) Control

Reversing valve is on in heat mode.
Switching of RV state is done only after compressor is off for over 2 minutes.

12.2 Fan Mode

In this mode, the indoor fan may run at high,medium,low and automatic speed. The compressor, outdoor fan and 4-way valve will be OFF.
In this mode, the range of setting temperature is 16~30 ^{o}C

12.3 Cool Mode

For model 09 and 12
If RAT≥SPT, the unit starts cooling operation. In this case, the compressor and outdoor fan will operate and the indoor fan will run at the setting speed.
If RAT≤SPT-2, the compressor will stop operation and the outdoor fan will delay 30 seconds to stop. While the indoor fan will run at the setting speed.

If SPT-2＜RAT＜SPT, the unit will maintain the previous status.

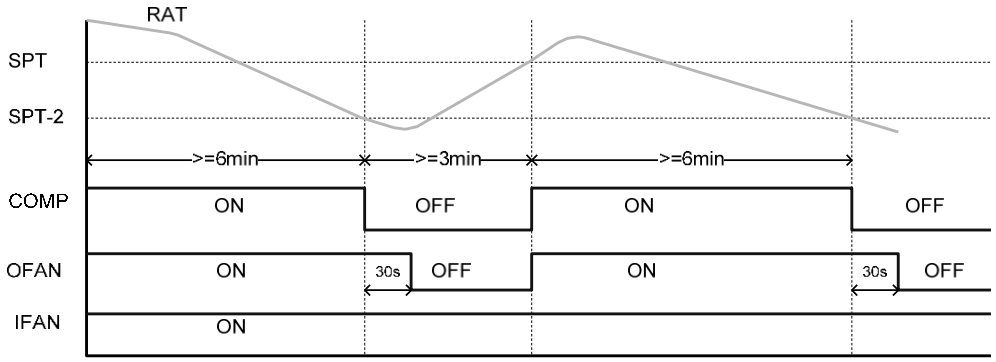

For model 18 and 24

If RAT≥SPT-0.5, the unit starts cooling operation. In this case, the compressor and outdoor fan will operate and the indoor fan will run at the setting speed.

If RAT≤SPT-2, the compressor will stop operation and the outdoor fan will delay 30 seconds to stop. While the indoor fan will run at the setting speed.

If SPT-2<RAT≤SPT, the unit will maintain the previous status.

12.3.1 Indoor Fan operation under Cool Mode

When SPT-RAT<0, if indoor fan motor operates at high speed, the fan motor will operate at medium speed. The medium speed or low speed will be maintained; (this condition should be executed when compressor starts up); this function will be excluded in the super high speed; When (RAT-SPT) ≥1 , the fan will return to the setting fan speed.

In AutoFan user setting, fan speed will be adjusted automatically according to the SPT and RAT, rerfer to 12.1.6

12.4 Heat Mode

For Model 09 and 12

If RAT≤SPT+2, the unit will operate in heating mode. The compressor, outdoor fan and 4-way valve will operate and the indoor fan will delay 3min to start at the latest

If SPT+2≤RAT≤SPT+5,the unit will maintain the previous status.

If RAT≥SPT+5, the compressor will stop, the outdoor fan will delay 30s to stop and the indoor fan will blow for 60s at the setting speed. During this period, the fan speed can’t be switched.

For model 18 and 24

If RAT≤SPT+3.5, the unit will operate in heating mode. The compressor, outdoor fan and 4-way valve will operate and the indoor fan will delay 3min to start at the latest
If SPT+3≤RAT≤SPT+5,the unit will maintain the previous status.

If RAT≥SPT+5, the compressor will stop, the outdoor fan will delay 30s to stop and the indoor fan will blow for 60s at the setting speed. During this period, the fan speed can't be switched.

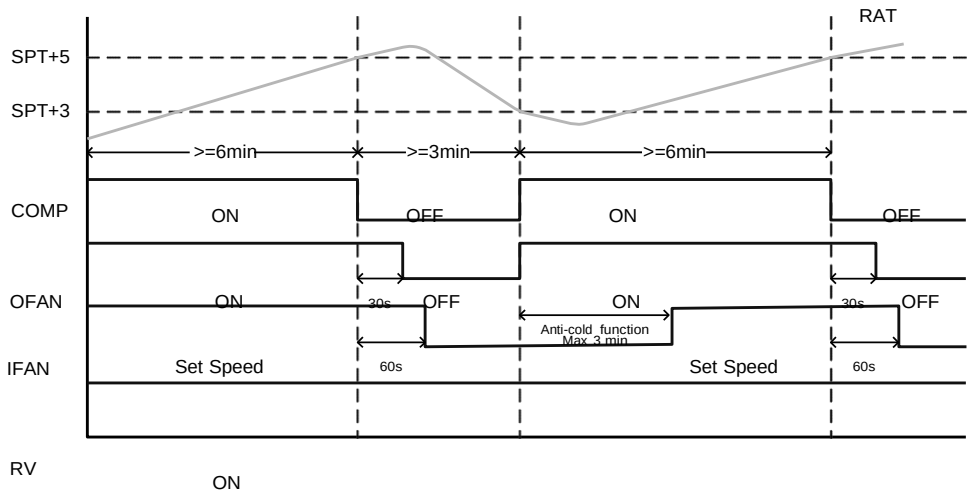

12.4.1 Indoor Fan Control in Heat Mode

Indoor fan speed depends on the indoor coil temperature

Anti-cold air function
When starting the heating mode, anti-cold air function will be activated and indoor fan can run at low speed or stop running. This function will terminate after the unit runs for 3min or the ICT reaches 42 degree.

Residual heat blowing function
During heating, when the stopping condition for the compressor is reached, the compressor and the outdoor fan motor stop running while the louver moves to position L. The indoor fan will stop after running for 60s at setting speed.

12.5 Auto Cool/Heat Mode

In AUTO mode, the system selects the running mode (COOL/HEAT/FAN) automatically according to the room temperature. The display shows the actual running mode and setting temperature. There will be 30s delay for mode conversion.
1. When RAT≥25 ^{o}C, the cooling mode is selected.
2. When RAT≤22 ^{o}C, the unit runs in heating mode
3. When 22 ^{o}C <RAT< 25 ^{o}C, upon initial startup, the unit will enter auto mode and run in automatic fan mode. If the other mode changes into auto mode, the previous running mode will remain.

12.6 Dry Mode

If RAT>SPT, the unit starts drying operation. Indoor fan, outdoor fan and compressor will operate and the indoor fan will run at low speed.

If SPT-2≤RAT≤SPT, the unit will keep running in the original mode.

If RAT<SPT-2, the compressor will stop running and the outdoor fan will delay 30 seconds to stop. While the indoor fan will run at low speed.

In this mode, the Reverse Valve will be OFF and the temperature setting range is 16~30.

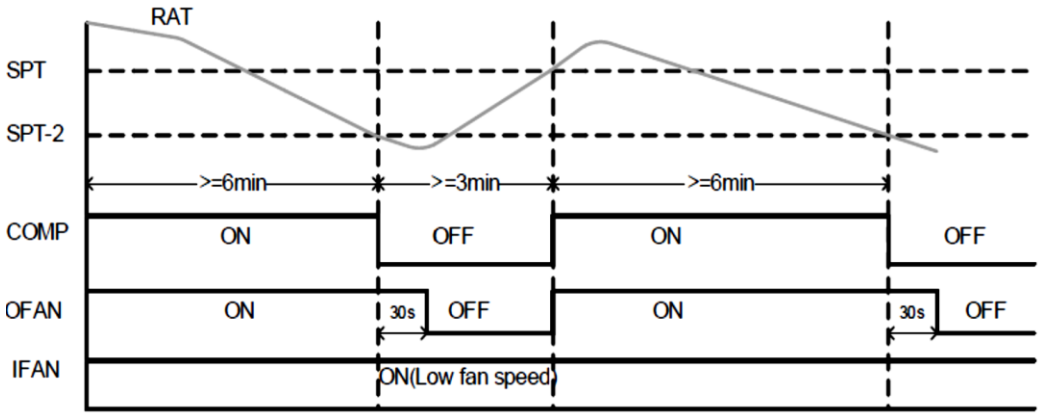

12.7 Louver Control

After power on, the up and down swing louver will automatically open and then close completely.
In heating mode, if the swing function is not set, the up and down louver will rotate to maximum in clockwise direction. Then it will rotate to position D. Under other states, the upper and lower air deflector will rotate to level L.
If the swing function is set when starting the unit, the louver will swing between Position L and D. there are 7 states for louver: in position L, A, B, C, D, and swing between L and D, stop in any place between Position L and position D. When the unit is turned off, the air deflector will stay in position 0.

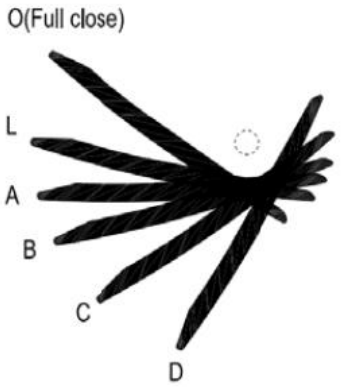

The swing is available only when the swing function is set and the indoor fan is running.
The louver swing can also be set between L and B, between A and C, between B and D.

Under clean function, the indoor fan will continue operation for 2 min at low speed after the unit is turned OFF.

Clean function is defaulted as OFF after unit is Power ON. Clean function is not available in Auto, Fan or Heat mode.

12.9 Sleep function

Pressing SLEEP b vutton will enable the Sleep function. will be shown on remote control.

Sleep function in Cool and Dry mode:
The SPT will be adjusted according to following chart.

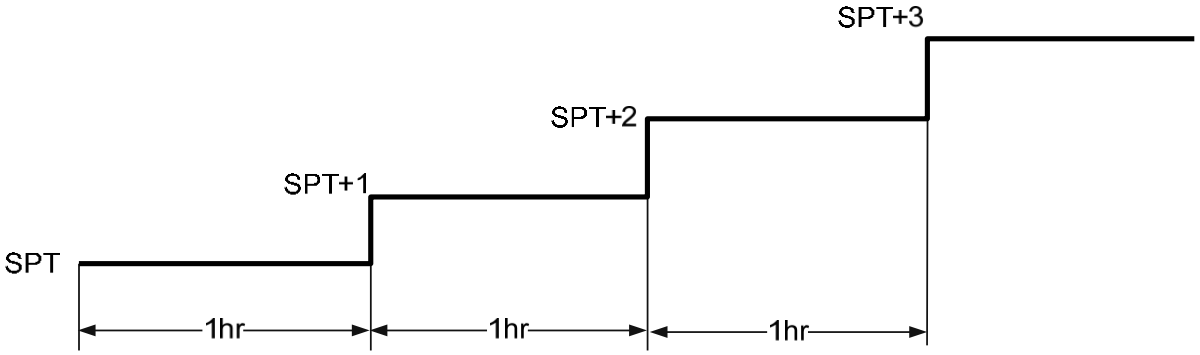

Sleep function in Heat mode:
The SPT will be adjusted according to following chart.

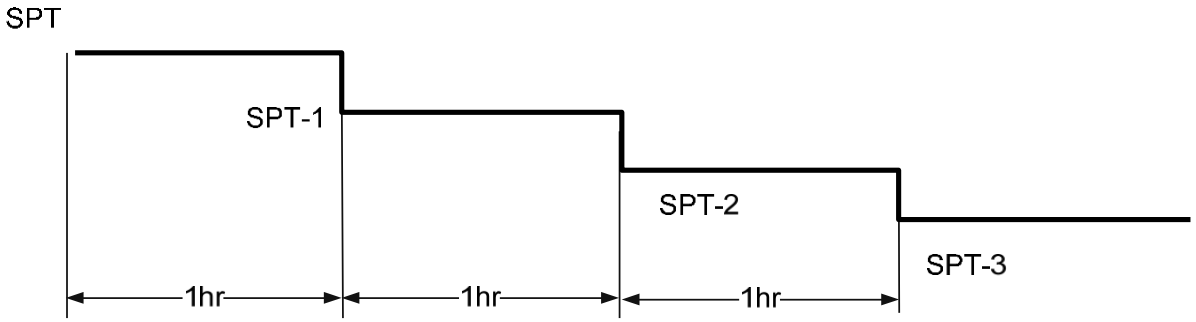

Press either Sleep button or ON/OFF button can cancel the Sleep function.
Sleep function will not be available in Auto mode or Fan mode.

12.10 I-Feel function

I-Feel function maintains the room temperature by comparing the RCT on remote control.

Pressing IFEEL button will enable the I-Feel function. I FEEL Will be shown on remote control. Under I-Feel function, remote control sends I-Feel data every 10 min to IDU controller. If the IDU controller does not received I-Feel data after 11 min. I-Feel function will be interrupted and then the AC will work according to RAT on the IDU. I-Feel function cannot be remembered after power failure.

12.11 Protections

There are 4 protection codes.
Normal (Norm) – unit operate normally.
Stop Rise (SR) – compressor frequency can not be raised but does not have to be decreased.
HzDown – Compressor frequency is reduced by 2Hz/s
Stop Compressor (SC) – Compressor is stopped.

12.11.1 Indoor Coil Defrost Protection

Conditions for Start Controlling
Judge the controlling start with the ICT (Indoor Coil Temperature) after 2 sec from operation start.

During cooling operation, the signals being sent from the indoor unit allow the operating frequency limitation and then prevent freezing of the indoor heat exchanger.

Compressor will stop when ICT <= -1 ^{o}C for continuous 3 mins.

If the unit stops as such protection for 6 times, it can not resume running automatically and display error code **E2**, it can resume by pressing ON/OFF.
During the operating, If compressor operates for more than 10min, the counter of stop operation due to protection will be cleared.

12.11.2 Compressor over Heating Protection

The Discharging temperature is used as the compressor's internal temperature. If the discharge temperature rises above a certain level, the operating frequency upper limit is set to keep this temperature from going up further.

Model 09/12 : Compressor will stop when CTT >110C
Model 18/24 : Compressor will stop when CTT >115C

If the unit stops as such protection for 6 times, it can not resume running automatically and display error Code **E4**, it can be resumed by pressing ON/OFF.
During the operating, If compressor operates for more than 10min, the counter of stop operation due to protection will be cleared.

12.11.3 Indoor Coil over Heating Protection (Heat Mode)

Conditions for Start Controlling
Judge the controlling start with the ICT after 2 sec from operation start.

During heating operation, the signals being sent from the indoor unit allow the operating frequency

limitation and prevent abnormal high pressure.

For Model 09/12: Compressor will stop when ICT reaches 62C
For Model 18/24, Compressor will stop when ICT reaches 64C

If the unit stops as such protection for 6 times, it can not resume running automatically and display the error code **E8**, it can resume by pressing ON/OFF.
During the operating, If compressor operates for more than 10min, the counter of stop operation due to protection will be cleared.

12.11.4 Outdoor Coil Overheating protection (Cool/Dry Mode):

During heating operation, the ODU Coil Overheating Protection is detected by temperature sensor OCT.

For Model 09/12: Compressor will stop when OCT reaches 62C
For Model 18/24, Compressor will stop when OCT reaches 65C

If the unit stops as such protection for 6 times, it can not resume running automatically and display the error code **E8**, it can resume by pressing ON/OFF.
During the operating, If compressor operates for more than 10min, the counter of stop operation due to protection will be cleared.

12.11.5 Compressor over Current Protection

Detect an input current by the CT during the compressor is running, and set the frequency upper limit from such input current. In case of heat pump model, this control is the upper limit control function of the frequency which takes priority of the lower limit of four way valve activating compensation.
Detail

Model 09/12: Compressor will stop when AC current reaches 14.0A for continuously 2.5s.
Model 18/24: Compressor will stop when AC current reaches 17.0A for continuously 2.5s.

If the unit stops as such protection for 6 times, it can not resume running automatically and display error Code **E5**, it can resume by pressing ON/OFF.
During the operating, If compressor operates for more than 10min, the counter of stop operation due to protection will be cleared.

12.11.6 Outdoor Coil Deicing Protection

This protection is for Heat Pump Only
This protection is carried out by the cooling cycle (reverse cycle). The defrosting time or outdoor heat exchanger temperature must be more than its setting values when finishing the deicing protection.
In the deicing protection, IFAN is forced OFF.

12.11.6.1 Deicing Starting Conditions

This protection is for Heat Pump Only
This protection is carried out by the cooling cycle (reverse cycle). The defrosting time or outdoor heat exchanger temperature must be more than its setting values when finishing the deicing protection.
In the deicing protection, IFAN is forced OFF.

12.11.6.2 Deicing Protection Procedure

Deicing Starting Conditions:
The starting conditions is a function of OAT and (OCT). Under the conditions that the system is in heating operation for certain period (Accumulated time)
After the deicing starting condition is detected for continuous 3minutes, the de-icing will start.
Start deicing:
Compressor stops and starts up 55S later
OFAN will stop after compressor stops for 50S
Finish Deicing:
Compressor stops and starts up 55S later;
OFAN will start up when the compressor is stopping

12.11.6.3 Exiting Deicing

OCT≤12°C or
OAT<5°C and OCT≥6°C lasts for more than 80Sec
Or Maximum de-icing time reaches 8min

12.11.7 Compressor Overload Protection:

The Discharging temperature is used for detecting the comp' temp'. If the discharge temperature rises above a certain level, the operating frequency upper limit is set to keep this temperature from going up further.

Model 09/12 : Compressor will stop when CTT >110C
Model 18/24 : Compressor will stop when CTT >115C

If the unit stops as such protection for 6 times, it can not resume running automatically and display error Code **E4**, it can be resumed by pressing ON/OFF.
During the operating, If compressor operates for more than 10min, the counter of stop operation due to protection will be cleared.

12.11.8 AC Over Current Protection:

Model 09/12: Compressor will stop when AC current reaches 14.0A for continuously 2.5s.
Model 18/24: Compressor will stop when AC current reaches 17.0A for continuously 2.5s.

If the unit stops as such protection for 6 times, it can not resume running automatically and display error Code **E5**, it can resume by pressing ON/OFF.
During the operating, If compressor operates for more than 10min, the counter of stop operation due to protection will be cleared.

12.11.9 AC Voltage Drop:

During compressor operation, the system will stop in case of an AC voltage malfunction the unit will resume its operation automatically after 3min.

12.11.10 Communication malfunction:

If the unit does not receive correct signal from indoor unit for 3min continuously, the unit will stop and will show communication malfunction protection (**E6**);
if the communication malfunction had been resumed and the compressor had stopped for a period of 3min, the unit will restart its operation.

12.11.11 Overload protection of compressor

The Over Load Protector (OLP) is equipped to have the protection by compressor shell temperature.
If OLP is detected OPEN for 3s successively, the system will stop operation.
it OLP is detected CLOSE, and compressor has stopped for 3min, the AC can go back to normal operation.
If the unit stops operation due to overload protection of compressor for 3 times successively, the unit can't resume operation automatically and will show **H3** error code, except pressing ON/OFF button.

* The counter can be cleared if compressor operates for 30min.

12.11.12 IPM module protection

After compressor is turned on, Once IPM modular protection signal (by its current or temperature)is detected, the unit will stop operation immediately.
If modular protection is resumed and compressor has stopped for 3min, the complete unit can then be allowed to resume operation.
If the unit stops operation due to modular protection for 3 times successively, the unit can't resume operation automatically and show error code **H5**, except pressing ON/OFF button.
* If compressor has operates for more than 10 min successively, the counter will be cleared.

12.11.13 Modular overheating protection (HST overheating protection)

Protect the IPM modular by reducing compressor frequency or stop compressor according to the Module temperature (HST)
When HST>=80C, compressor frequency will be decreased or stopped increasing.
When HST>=95C, the unit will stop. (Back to normal when HST>87C and Comp OFF time >3mins.)
If the unit stops operation for 6 times, the unit can't resume its operation and show error code **P8** . Only press ON/OFF button can resume the operation.
* If compressor has operates for more than 10 min successively, the counter will be cleared.

12.11.14 Sensor Failure

When the temperature sensor is detected short circuit or open circuit for 5s successively, the unit will stop operation, and error code will be shown accordingly.

Error code of Sensor:

F1 – RAT Sensor Failure
F2 – ICT Sensor Failure
F3 – OAT Sensor Failure
F4 – OCT Sensor Failure
F5 – CTT Sensor Failure

ICT sensor failure will not be detected during ODU deicing stage. It starts detecting the sensor failure after deicing is finished for 5 mins.
Other sensor failure will be detected at any other time.

12.12 Operating the Unit from the ON/OFF Button

The ON/OFF button allows to operate the unit in AUTO mode, the microcomputer will monitor the room temperature and select the (COOL, HEAT, FAN) mode automatically, and temperature/Fan speed settings can not be changed.

12.13 Indoor Unit Controllers and Indicators

The following is schematic drawing for the display:

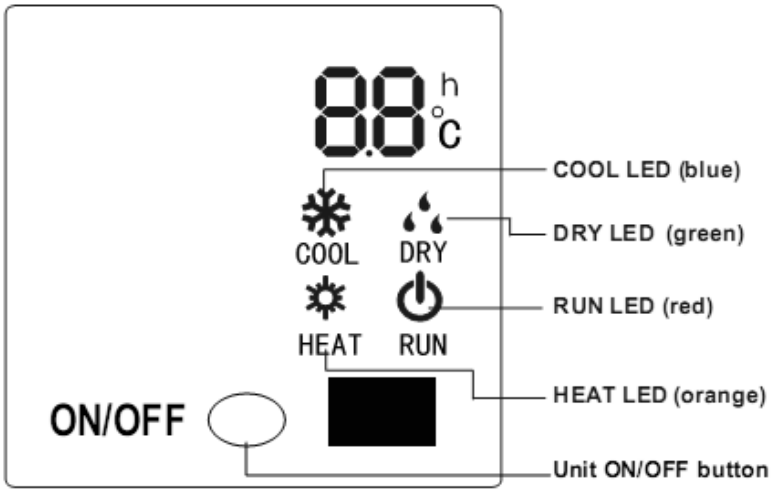

RUN INDICATOR	1. Lights up when the Air Conditioner is connected to power and the mode is STBY. 2. When the unit is turned on remotely, the RUN LED goes out while the current setting running mode is displayed
COOL INDICATOR DRY INDICATOR HEAT INDICATOR	1. Lights up during specified operation mode (COOL/DRY/HEAT).
2* 7 segments display	1. In normal situation, the setting temperature is displayed. 2. Shows outdoor temperature or indoor temperature when receiving the corresponding demand from controller. It resumes displaying setting temperature 5s later 3. Shows the alarm code whenever there is an alarm.(Refer to Diagonostic part)
Unit ON/OFF Button	**Short pressing(Less than 5s)** : Unit will swich between Auto mode and STBY. System will select the COOL/HEAT/FAN mode automatically and temperature/Fan speed settings can not be changed. **Long pressing (5~10s):** System will enter into Force cooling operating

12.14 Test Mode

TO BE CONFIRMED

13. TROUBLESHOOTING

13.1 ELECTRICAL & CONTROL TROUBLESHOOTING

13.1.1 Precautions before Performing Inspection or Repair

Be cautious during installation and maintenance. Do operation following the regulations to avoid electric shock and casualty or even death due to drop from high attitude.

* **Static maintenance** is the maintenance during de-energization of the air conditioner.
For static maintenance, make sure that the unit is de-energized and the plug is disconnected.

***Dynamic maintenance** is the maintenance during energization of the unit. Before dynamic maintenance, check the electricity and ensure that there is ground wire on the site. Check if there is electricity on the housing and connection copper pipe of the air conditioner with voltage tester. After ensure insulation place and the safety, the maintenance can be performed.

Take sufficient care to avoid directly touching any of the circuit parts without first turning off the power. At time such as when the circuit board is to be replaced, place the circuit board assembly in a vertical position. Normally, diagnose troubles according to the trouble diagnosis procedure as described below.(Refer to the check points in servicing written on the wiring diagrams attached to the indoor/outdoor units.)

Precautions when inspecting the control section of the outdoor unit: A large-capacity electrolytic capacitor is used in the outdoor unit controller (inverter).Therefore,if the power supply is turned off, charge(charging voltage DC280V to 380V)remains and discharging takes a lot of time. After turning off the power source,if touching the charging section before discharging, an electrical shock may be caused.
The outdoor unit can not be started up until the unit is de-energized for 20min

13.1.2 Confirmation

13.1.2.1 Confirmation of Power Supply Confirm that the power breaker operates(ON) normally;

13.1.2.2 Confirmation of Power Voltage Confirm that power voltage is AC220~240V +/- 10%. If power voltage is not in this range, the unit may not operate normally.

13.1.3 Judgment by Indoor/Outdoor Unit Diagnostics

If the malfunction still exists 4min later after stop of unit due to compressor protection, error code will be directly displayed though indoor display. In other situations, error code can be displayed by pressing LIGHT button 6 times within 4s.

Malfunction	2 x	IDU LEDs	Possible causes / Actions
System High Pressure Protection	E1	OPER Indicator OFF 3s and blink once	1. Refrigerant was superabundant 2. Poor heat exchange (including filter blockage of heat exchanger and bad radiating environment)
Indoor Coil Defrost Protection	E2	OPER Indicator OFF 3S and blink twice	1. Poor air-return in indoor unit 2. Fan speed is abnormal 3. Evaporator is dirty.
System block or refrigerant leakage	E3	OPER Indicator OFF 3S and blink 3 times	1.Low-pressure protection 2.Low-pressure protection of system 3.Low-pressure protection of
Compressor over Heating Protection	E4	OPER Indicator OFF 3S and blink 4 times	1. EEV connection problem or damage 2. Refrigerant leakage
AC Over Current	E5	OPER Indicator OFF 3S and blink 5 times	1. Supply voltage is unstable 2. Supply voltage is too low and load is too high 3. Evaporator is dirty.
Communication Malfunction	E6	OPER Indicator OFF 3 Sand blink 6 times	1. Wiring mistakes 2. IDU or ODU PCB problem
Indoor/Outdoor Coil Over Heating Protection	E8	OPER Indicator OFF 3S and blink 8 times	1. Too high ambient temperature 2. Poor heat exchange (including blockage and bad radiating
EEPROM problem	EE	HEAT Indicator OFF 3Sand blink15 times	Outdoor main board damaged
Stop rise/HZ down due to HST over heating protection	EU		1. Insufficient grease on heatsink or poor connection of heatsink to PCB 2. Outdoor PCB problem.
Jumper Cap Malfunction	C5	OPER Indicator OFF 3S and blink 15 times	1. No jumper cap insert on main board. 2. Incorrect insert of jumper cap. 3. Jumper cap damaged. 4. Abnormal detecting circuit of
Gathering refrigerant	F0		Normal function
RAT Failure	F1	COOL Indicator OFF 3S and blink once	1. Sensor connection is not good 2. Indoor ambient temp. sensor damaged.(check with sensor resistance value chart)
ICT Failure	F2	COOL Indicator OFF 3S and blink twice	
OAT Failure	F3	COOL Indicator OFF 3Sand blink3 times	
OCT Failure	F4	COOL Indicator OFF 3Sand blink4 times	
CTT Failure	F5	COOL Indicator OFF 3S and blink 5 times	
HZ down due to overload	F6	COOL Indicator OFF 3S and blink for 6 times	1. Too high ambient temperature 2. Poor heat exchange (including blockage and bad radiating
Hz down due to over current	F8	COOL Indicator OFF 3S and blink 8 times	1.The input supply voltage is too low 2.System pressure is too high and overload
Hz down due to CTT over heating	F9	COOL Indicator OFF 3S and blink 9 times	1.Overload or temperature is too high; 2.Refrigerant is insufficient 3.Malfunction of electric expansion
Stop rise/HZ down due to IDU defrosting protection	FH		1. Poor air-return in indoor unit 2. Fan speed is abnormal 3. Evaporator is dirty.

DC Over Voltage	PH	COOL Indicator OFF 3S and blink 11 times	1. AC power supply is higher than 2 2. Outdoor PCB circuit malfunction
DC Under Voltage	PL	HEAT Indicator OFF 3Sand blink21 times	1. AC power supply voltage is less than 150VAC 2. Outdoor PCB circuit malfunction
DC Over Current	P5	COOL Indicator OFF 3Sand blink15 times	1. Abnormal power input voltage. 2. Compressor wiring mistake. 3. Liquid and gas valve are not open. 4. EEV damaged or not proper working 5. Poor heat exchange. 6. Over charged system.
Charging malfunction of capacitor	PU	HEAT Indicator OFF 3Sand blink17 times	1. Reactor open 2. Charging relay or other components damaged on PCB.
HST Failure	P7	HEAT Indicator OFF 3Sand blink18 times	1. Senor was broken or damaged 2. PCB temperature detection cuircuit has problem
HST over heating	P8	HEAT Indicator OFF 3Sand blink19 times	1. Insufficient attachment of IPM module to Heatsink 2. Outdoor PCB problem.
Compressor overload protection	H3	HEAT Indicator OFF 3Sand blink3 times	1. EEV connection problem or damaged 2. Refrigeratn leakage 3. OLP damaged
IPM protection	H5	HEAT Indicator OFF 3Sand blink5 times	1.Abnormal power input voltage. 2.Compressor wiring mistake. 3.Liquid and gas valve are not open. 4.EEV damaged or not proper working 5.Poor heat exchage. 6.Over charged system.
No feedback of indoor motor	H6	OPER Indicator OFF 3S and blink 11 times	1. Bad contact of DC motor feedback terminal. 2. Bad contact of DC motor control end. 3. Fan motor is blocked. 4. Motor malfunction. 5. Malfunction of main board rev detecting circuit.
Desynchronizing of compressor	H7	HEAT Indicator OFF 3Sand blink7 times	1. Abnormal power input voltage. 2. Compressor wiring mistake. 3. Liquid and gas valve are not open. 4. EEV damaged or not proper working 5. Poor heat exchage. 6. Over charged system.
PFC protection	HC	HEAT Indicator OFF 3Sand blink6 times	1. PFC module assembly problem. 2. Poor heat exchange of Heatsink 3. PFC reactor problem. 4. Abnormal power voltage 5. PFC circuit problem on PCB
Outdoor DC fan motor malfunction	L3	OPER Indicator OFF 3S and blink 23 times	1.DC fan motor malfunction or blocked 2.Bad connection
Over Power Protection	L9	OPER Indicator OFF 3S and blink 20 times	To protect the electronical components when detect high power
IDU/ODU Mismatch	LP	OPER Indicator OFF 3S and blink19 times	Indoor unit and outdoor unit doesn't match
Start-up Failure	LC	HEAT Indicator OFF 3Sand blink11 times	1. Compressor wiring mistake 2. Over charged system 3. System not balanced before compressor starting 4. Compressor problem
ODU Deicing		HEAT Indicator OFF 3Sand blink once(during blinking, ON 10s and HEAT Indicator OFF	Its the normal state

Malfunction of phase current detection circuit for compressor	U1	HEAT Indicator OFF 3Sand blink13 times	Outdoor main board damaged
Malfunction of voltage dropping for DC BUS	U3	HEAT Indicator OFF 3Sand blink20 times	Supply voltage is unstable
AC Current detection problem	U5	COOL Indicator OFF 3Sand blink13 times	Outdoor main board damaged
The RV is abnormal	U7	COOL Indicator OFF 3Sand blink20 times	1.Supply voltage is lower than AC175V; 2.Wiring terminal RV is loosened or broken; 3.RV is damaged.
Zero-crossing protection (IDU)	U8	OPER Indicator OFF 3S and blink 17 times	1.Power supply is abnormal 2.Detection circuit of indoor control main board is abnormal.
Outdoor unit zero-cross detecting error	U9		Outdoor main board damaged

13.1.4 Checking the refrigeration system

Checking system pressures and other thermodynamic measures should be done when system is in Test Mode (in Test mode, system operates in fixed settings). The performance curves given in this manual are given for unit performance in test mode when high indoor fan speed is selected.
Entering test mode please refer to section 12- Control system.

13.2 Simple procedures for checking the Main Parts

13.2.1 Checking Mains Voltage.

Confirm that the Mains voltage is between 198 and 264 VAC. If Mains voltage is out of this range, abnormal operation of the system is expected. If in range check the Power (Circuit) Breaker and look for broken or loosed cable lugs or wiring mistake(s).

13.2.2 Checking Power Input.

If Indoor unit power LED is unlighted, power down the system and check the fuse of the Indoor unit. If the fuse is OK replace the Indoor unit controller. If the fuse has blown, replace the fuse and power up again.
Checking Power Input procedure for the Outdoor unit is the same as with the Indoor unit.

13.2.3 Checking the Outdoor Fan Motor.

For AC motor
Check the voltage between two pins Hi and N of connector OFAN on controller, normal voltage is 220~240VAC.

For DC Motor
Check the voltage between any two pins of connector OFAN on controller, normal voltage is 280~380VDC

13.2.4 Checking the Compressor.

The compressor is brushless permanence magnetic DC motor. Three coil resistance is same. Check the resistance between three poles. The normal value should be with the almost same value. Pay attention U,V, W are respective to connect to RED,YELLOW,BLUE wires.

13.2.5 Checking the Reverse Valve (RV).

Running in heating mode, check the voltage between two pins of reverse valve connector, normal voltage is 220~240VAC.

14. CHARACTERISTICS OF SENSOR

14.1.1 RAT/OAT

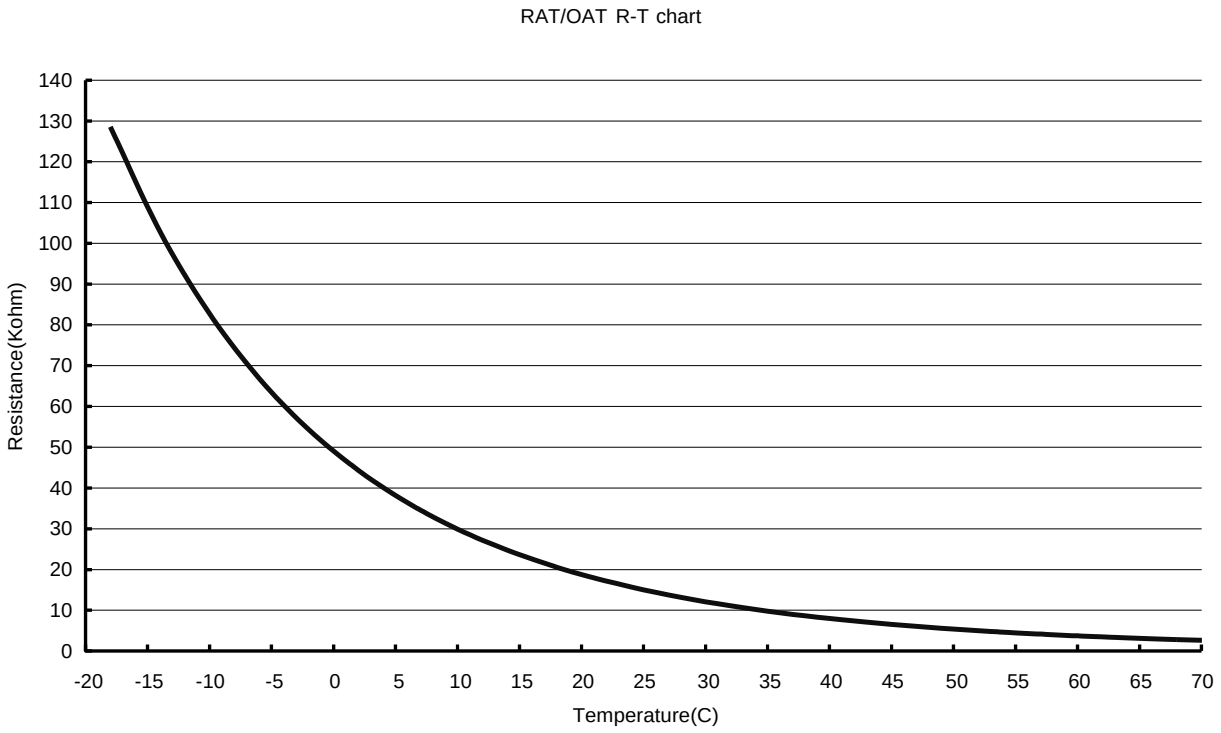

14.1.2 ICT/OCT

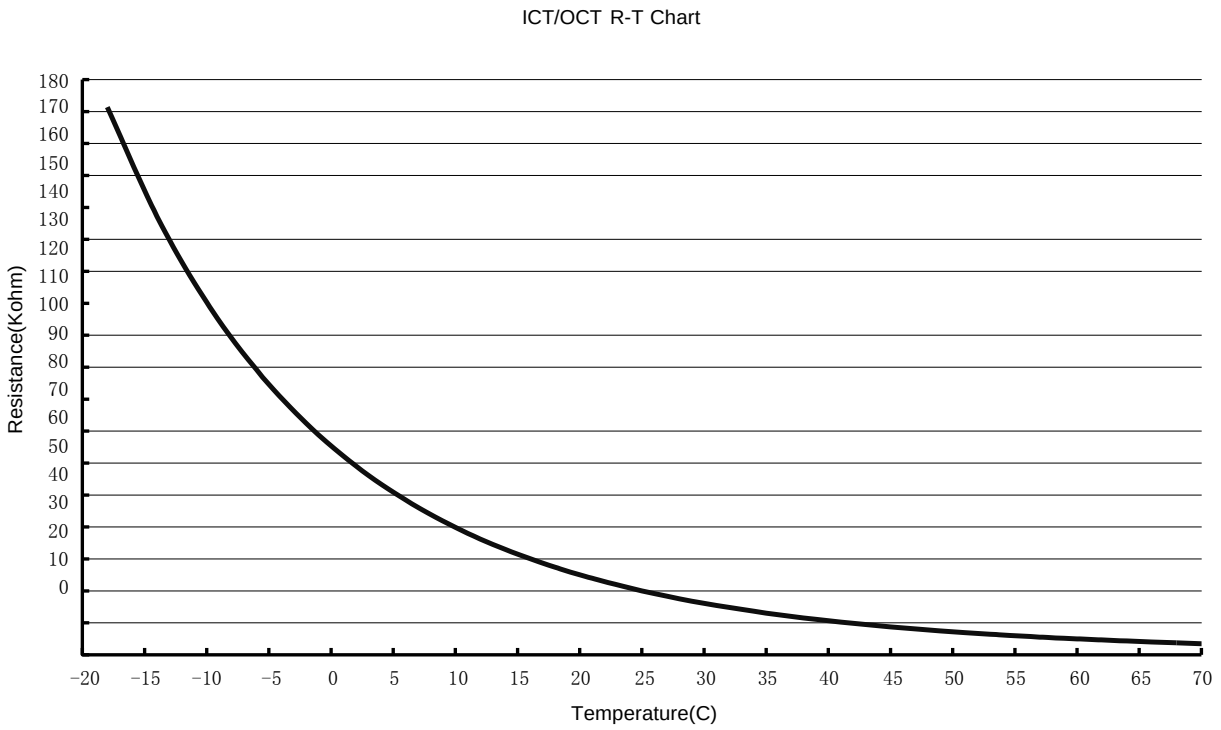

14.1.3 CTT

CTT R-T Chart

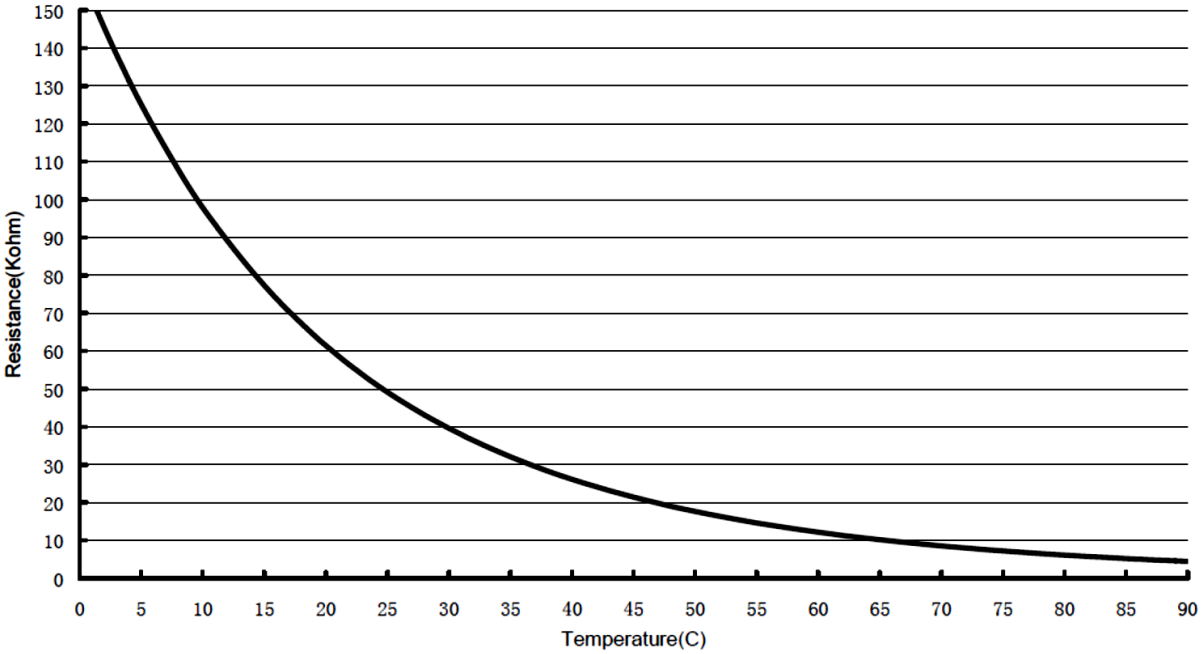

15. EXPLODED VIEW & SPARE PART LIST

15.1 Exploded view of indoor unit: HDDE009, HDDE012

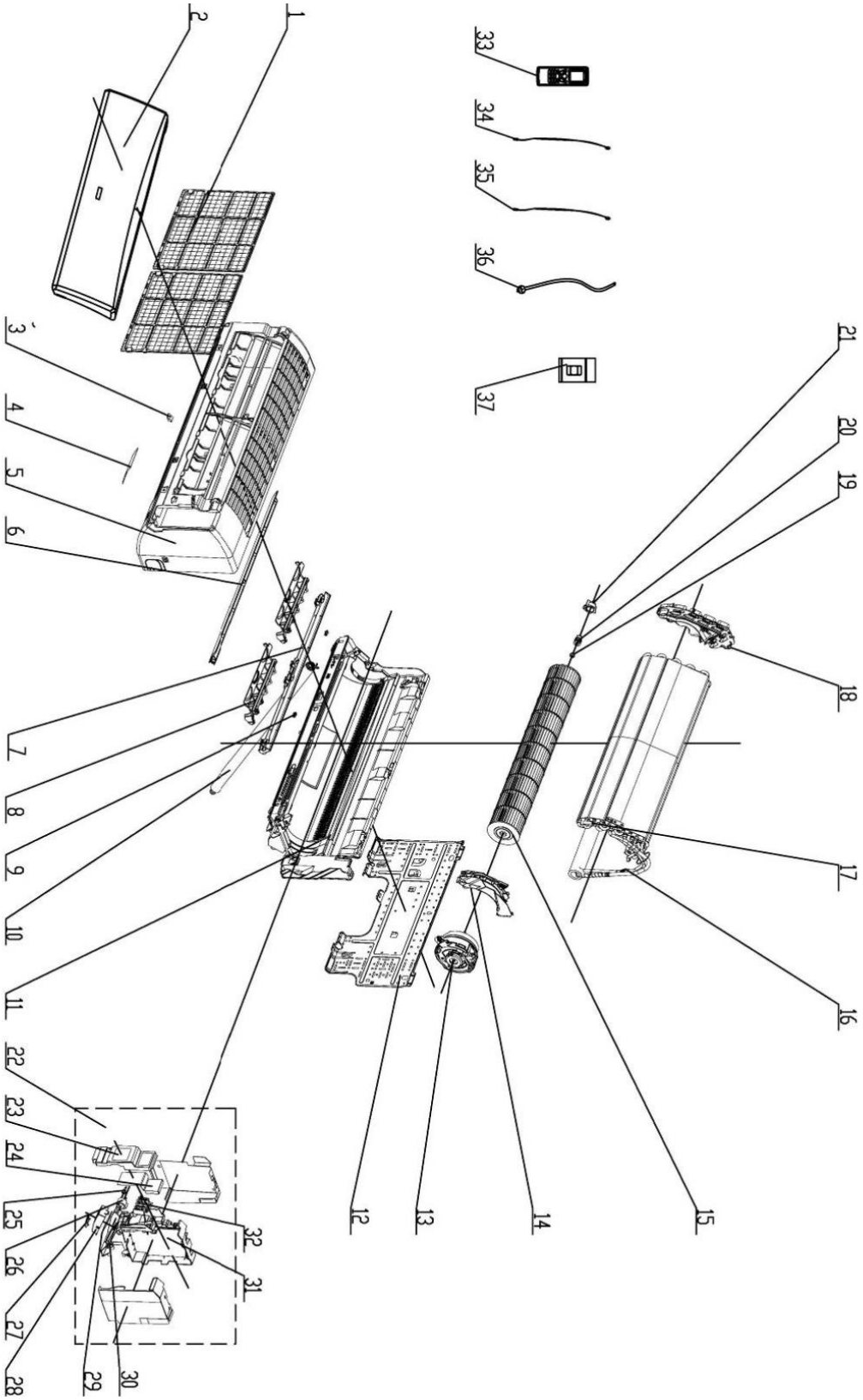

15.2 Spare part list of indoor Unit: HDDE009

NO.	Part Code	Part Description	qty
1	G1112208201	Filter Sub-Assy	2
2	G20012806B	Front Panel	1
3	G24252019	Screw Cover	1
4	G63062017	Membrane	1
5	G2001237501	Front Case Assy	1
6	G10512119	Guide Louver	1
7	G26112486	Helicoid tongue	1
8	G10512160	Air Louver	2
9	G1054202001	Shaft of Guide Louver	2
10	G0523204101	Drainage Pipe Sub-assy	1
11	G2220229501_K88497	Rear Case assy	1
12	G0125201801A	Wall Mounting Frame	1
13	G15002020	Motor Sub-Assy	1
14	G26112191	Motor Press Plate	1
15	G10352423	Cross Flow Fan	1
16	G0100227003	Evaporator Assy	1
17	none	Tube Sensor Bushing	1
18	G24212108	Evaporator Support	1
19	G76512210	Fan Bearing	1
20	G76712032	Bearing Holder	1
21	G1054202101	Propeller Axile Bush	1
22	G20402706	Electric Box Assy	1
23	G20122106	Electric Box Cover	1
24	G01592076	Shield Cover	1
25	G73012005	Crank	1
26	G1521210701	Step Motor	1
27	G22242083	Indicator shield cover	1
28	G22242084	Indicator Light Cover	1
29	G30568112	Display Board	1
30	G20112086	Electric Box	1
31	G30148846	Main Board	1
32	G42011233	Terminal Board	1
33	G30510460_K88497	Remote Controller	1
34	G390000453	Ambient Temperature Sensor	1
35	G39000305	Temperature Sensor	1
36	G400204643	Power Cord	1
37	none	Pipe Connection Nut accessories	1

15.3 Spare part list of indoor Unit: HDDE012

NO.	Part Code	Part Description	qty
1	G1112208201	Filter Sub-Assy	2
2	G20012806B	Front Panel	1
3	G24252019	Screw Cover	1
4	G63022016	Membrane	1
5	G20012824	Front Case Assy	1
6	G10512119	Guide Louver	1
7	G26112486	Helicoid tongue	1
8	G10512160	Air Louver	2
9	G1054202001	Shaft of Guide Louver	2
10	G0523204101	Drainage Pipe Sub-assy	1
11	G2220229501_K8849	Rear Case assy	1
12	G0125201801A	Wall Mounting Frame	1
13	G15002020	Motor Sub-Assy	1
14	G26112191	Motor Press Plate	1
15	G10352423	Cross Flow Fan	1
16	G0100274503	Evaporator Assy	1
17	none	Tube Sensor Bushing	1
18	G24212108	Evaporator Support	1
19	G76512210	Fan Bearing	1
20	G76712032	Bearing Holder	1
21	G1054202101	Propeller Axile Bush	1
22	G20402765	Electric Box Assy	1
23	G20122106	Electric Box Cover	1
24	G01592076	Shield Cover	1
25	G73012005	Crank	1
26	G1521210701	Step Motor	1
27	G22242083	Indicator shield cover	1
28	G22242084	Indicator Light Cover	1
29	G30568112	Display Board	1
30	G20112086	Electric Box	1
31	G30148846	Main Board	1
32	G42011233	Terminal Board	1
33	G30510460_K88497	Remote Controller	1
34	G390000453	Ambient Temperature Sensor	1
35	G39000305	Temperature Sensor	1
36	G400204643	Power Cord	1
37	none	Pipe Connection Nut accessories	1

15.4 Exploded view of indoor unit: HDDE018

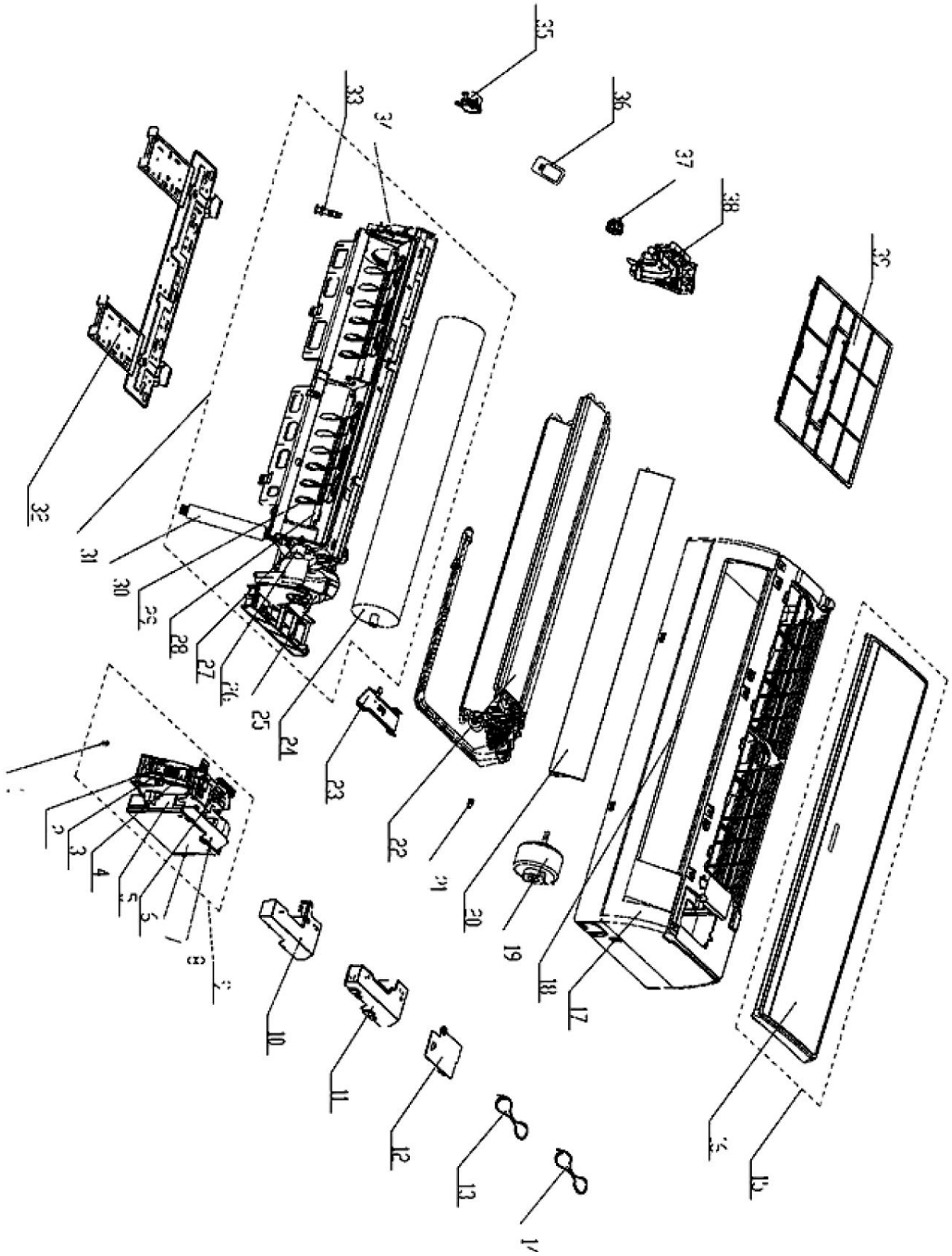

15.5 Spare part list of indoor Unit: HDDE018

NO.	Part Code	Part Description	qty
1	G4202300115	Jumper	1
2	G22242083	Indicator shield cover	1
3	G22242084	Indicator Light Cover	1
4	G30568112	Display Board	1
5	G20112103	Electric Box	1
6	G4201026601	Terminal Board	1
7	G01592087	Shield cover of Electric Box	1
8	G30148858	Main Board	1
9	G20402748	Electric Box Assy	1
10	G20122123	Electric Box Cover	1
11	G01592088	Shield Cover of Electric box Cover	1
12	G20122142	Electric Box Cover2	1
13	G4002046421	Power Cord	1
14	G40020538	Connecting Cable	1
15	G20012872_K8849	Front Panel Assy	1
16	G20012808P	Front Panel	1
17	G20012873	Front Case Assy	1
18	G242520041	Screw Cover	1
19	G15012146	Fan Motor	1
20	G10512140	Guide Louver	1
21	G10542036	Axile Bush	1
22	G01002320	Evaporator Assy	1
23	G26112164	Pipe Clamp	1
24	G10352036	Cross Flow Fan	1
25	G26112231	Motor Press Plate	1
26	G15012086	Step Motor	1
27	G10582070	Crank	1
28	G26112232	Helicoid tongue	1
29	G10512160	Air Louver	2
30	G0523001407	Drainage hose	1
31	G22202154	Rear Case assy	1
32	G01252484	Wall Mounting Frame	1
33	G76712012	Water Tray Glue Plug	1
34	G10512037	Left Axile Bush	1
35	G26152022	Ring of Bearing	1
36	G30510460_K8849	Remote Controller	1
37	G7651205102	O-Gasket sub-assy of Bearing	1
38	G24212119	Evaporator Support	1
39	G11122104	Filter Sub-Assy	2

15.6 Exploded view of indoor unit: HDDE024

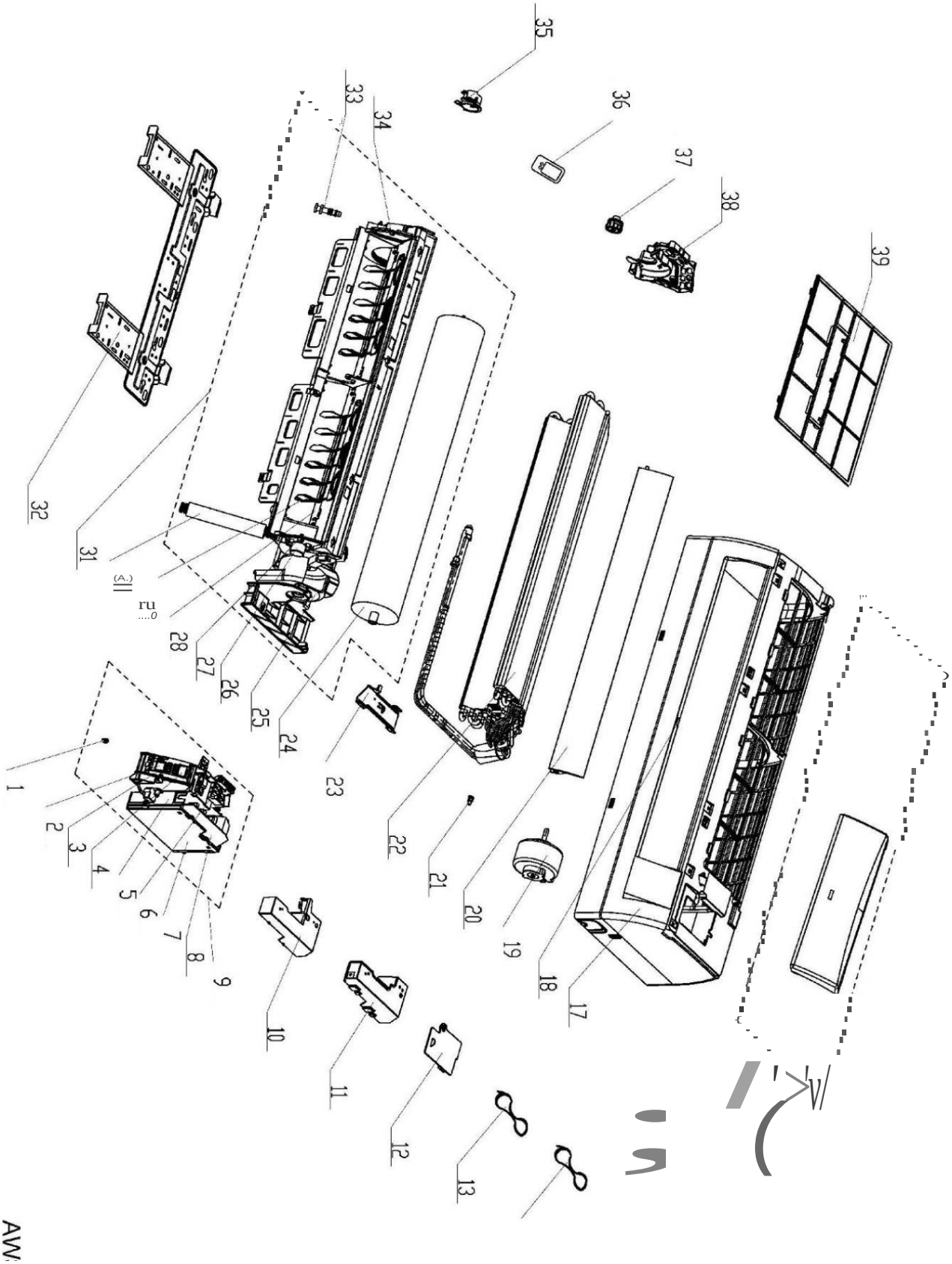

15.7 Spare part list of indoor Unit: HDDE024

NO.	Part Code	Part Description	qty
1	G4202300127	Jumper	1
2	G22242083	Indicator shield cover	1
3	G22242084	Indicator Light Cover	1
4	G30568112	Display Board	1
5	G20112103	Electric Box	1
6	G42011233	Terminal Board	1
7	G01592087	Shield cover of Electric Box	1
8	G30148859	Main Board	1
9	G20402814	Electric Box Assy	1
10	G20122123	Electric Box Cover	1
11	G01592088	Shield Cover of Electric box Cover	1
12	G20112081	Electric Box Cover2	1
13	G4002046418	Power Cord	1
14	G40020538	Connecting Cable	1
15	G20012828_K8849	Front Panel Assy	1
16	G20012809P	Front Panel	1
17	G20012845	Front Case Assy	1
18	G24252016	Screw Cover	3
19	G15012098	Fan Motor	1
20	G10512138	Guide Louver	1
21	G10542036	Axile Bush	2
22	G0100257205	Evaporator Assy	1
23	G26112188	Pipe Clamp	1
24	G10352030	Cross Flow Fan	1
25	G26112316	Motor Press Plate	1
26	G1521300101	Stepping Motor	1
27	G10582070	Crank	1
28	G26112229	Helicoid tongue	1
29	G10512139	Air Louver	3
30	G0523001405	Drainage hose	1
31	G22202157	Rear Case assy	1
32	G01252032	Wall Mounting Frame	1
33	G76712012	Water Tray Glue Plug	1
34	G10512037	Left Axile Bush	1
35	G26152025	Ring of Bearing	1
36	G30510460_K8849	Remote Controller	1
37	G7651205102	O-Gasket sub-assy of Bearing	1
38	G24212103	Evaporator Support	1
39	G11122091	Filter Sub-Assy	2

15.8 Exploded view of outdoor unit: YDDE009, YDDE012

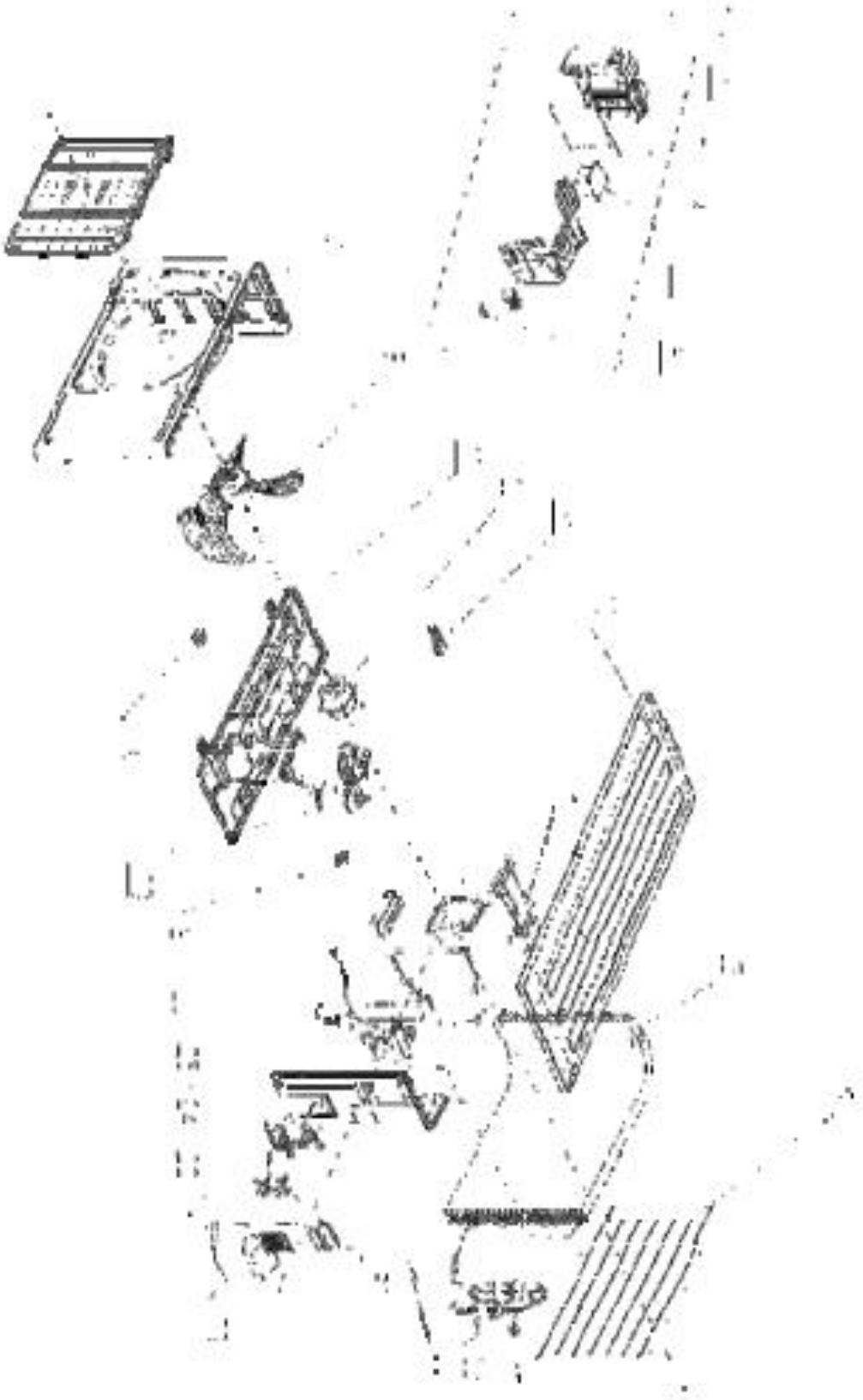

15.9 Spare part list of outdoor Unit: YDDE009

NO.	Part Code	Part Description	qty
1	G02613858	Electric Box Assy	1
2	G02613862	Electric Box Sub-Assy	1
3	G30148854	Main Board	1
4	G43130184	Reactor	1
5	G420111041	Terminal Board	1
6	G71010003	Wire Clamp	1
7	G22413007	Front Grill	1
8	G01533034P	Front Panel	1
9	G10333004	Axial Flow Fan	1
10	G02803037P	Chassis Sub-assy	1
11	G1501308502	Brushless DC Motor	1
12	G26233100	Small Handle	1
13	G01253073	Top Cover Sub-Assy	1
14	G01703104	Motor Support	1
15	G01163812	Condenser Assy	1
16	G01473009	Rear Grill	1
17	G4300876701	Magnet Coil	1
18	G07130369	Electronic Expansion Valve	1
19	G3900030804	Temperature Sensor	1
20	G07133474	Cut off Valve Assy	1
21	G07100003	Valve	1
22	G0171314201P	Valve Support	1
23	G26233433	Big Handle	1
24	G0130317801	Right Side Plate Sub-Assy	1
25	G03073151	4-Way Valve Assy	1
26	G01233385	Clapboard Sub-Assy	1
27	G49010109	Magnetic Ring	1
28	G00103896G	Compressor and Fittings	1
29	G06123401	Drainage Connecter	1

15.10 Spare part list of outdoor Unit: YDDE012

NO.	Part Code	Part Description	qty
1	G02613643	Electric Box Assy	1
2	G02613666	Electric Box Sub-Assy	1
3	G30148856	Main Board	1
4	G43130184	Reactor	1
5	G420111041	Terminal Board	1
6	G71010003	Wire Clamp	1
7	G22413007	Front Grill	1
8	G0153303204P	Front Panel	1
9	G10333427	Axial Flow Fan	1
10	G02803279P	Chassis Sub-assy	1
11	G1501306719	Fan Motor	1
12	none	Small Handle	0
13	G01253443	Top Cover Plate	1
14	G0170310401	Motor Support	1
15	G01163898	Condenser Assy	1
16	G01473057	Rear Grill	1
17	G4300876701	Magnet Coil	1
18	G07133818	Electric Expansion Valve Sub-Assy	1
19	G3900030805	Temperature Sensor	1
20	G071302391	Cut off Valve	1
21	G07100003	Valve	1
22	G01713169	Valve Support Assy	1
23	G26233433	Big Handle	1
24	G0130317801	Right Side Plate Sub-Assy	1
25	G03073136	4-Way Valve Assy	1
26	G0123314201	Clapboard Sub-Assy	1
27	G49010109	Magnetic Ring	1
28	G00103896G	Compressor and Fittings	1
29	G06123401	Drainage Connecter	1

15.11 Exploded view of outdoor unit: YDDE018

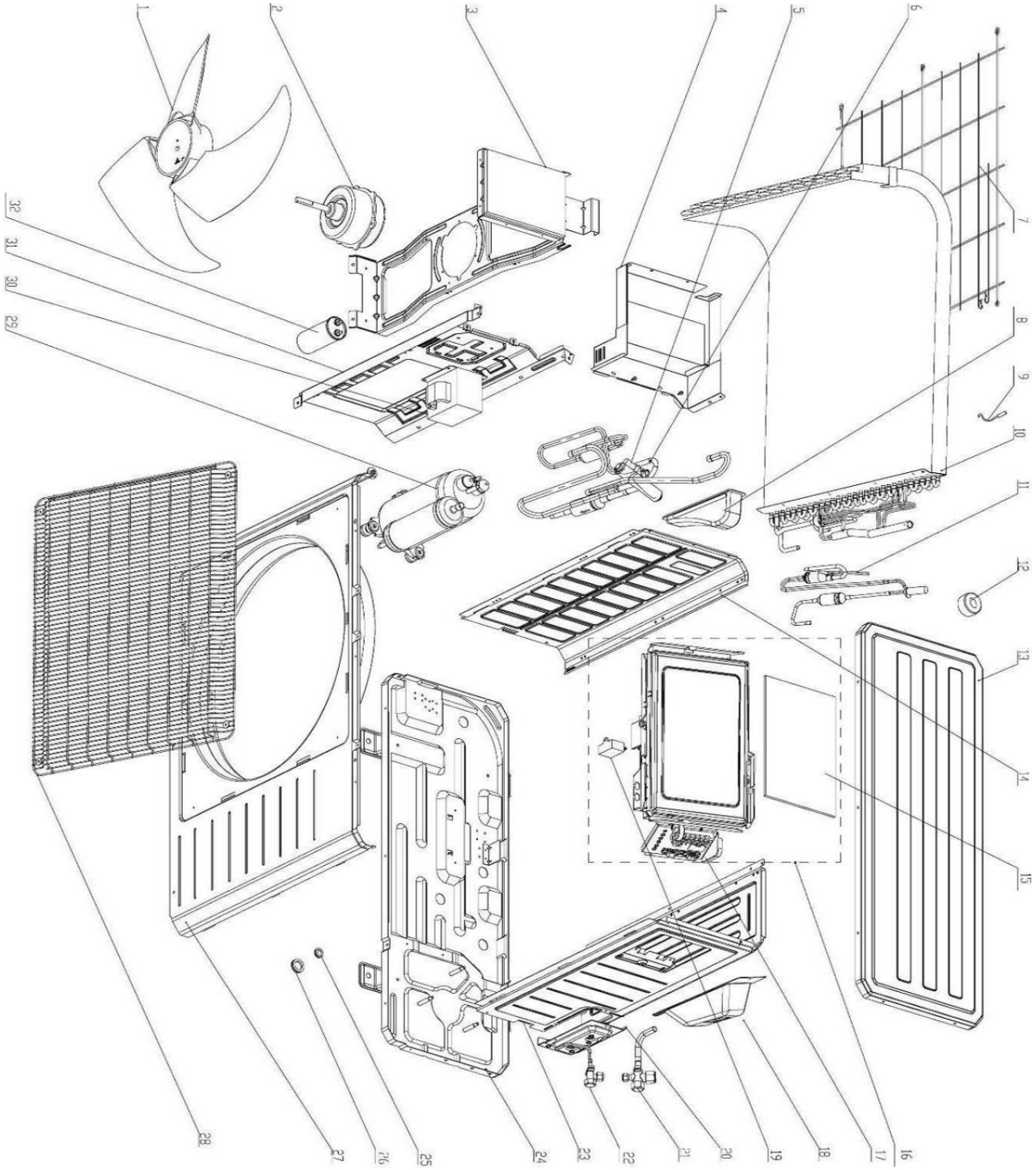

15.12 Spare part list of outdoor Unit: YDDE018

NO.	Part Code	Part Description	qty
1	G10335008	Axial Flow Fan	1
2	G1501506402	Fan Motor	1
3	G01705036	Motor Support Sub-Assy	1
4	none	Electric Box (Fireproofing)	0
5	G4300040033	Magnet Coil	1
6	G03073158	4-Way Valve Assy	1
7	G01473043	Rear Grill	1
8	G26235401	Left Handle	1
9	G3900030901	Temperature Sensor	1
10	G01163935	Condenser Assy	1
11	none	Electronic Expansion Valve assy	0
12	none	Electric Expand Valve Fitting	0
13	G01255005P	Top Cover	1
14	G01305093P	Left Side Plate	1
15	G20113003	Insulating Plate of Electric box Cover	1
16	G02613677	Electric Box Assy	1
17	G420111041	Terminal Board	1
18	G26235254	Handle	1
19	none	Capacitor CBB61	0
20	G01715010P	Valve support assy	1
21	G0713506803	Cut off Valve	1
22	G0713506703	Cut off Valve	1
23	G0130509402P	Right Side Plate	1
24	G02803207P	Chassis Sub-assy	1
25	G06123401	Drainage Connecter	1
26	G0681340101	Drainage Plug	3
27	G01535013P	Front Panel	1
28	G22415002	Front Grill	1
29	G00105249G	Compressor and Fittings	1
30	G43130025	Reactor	1
31	G01233153	Clapboard Assy	1
32	none	Capacitor CBB65	0

15.13 Exploded view of outdoor unit: YDDE024

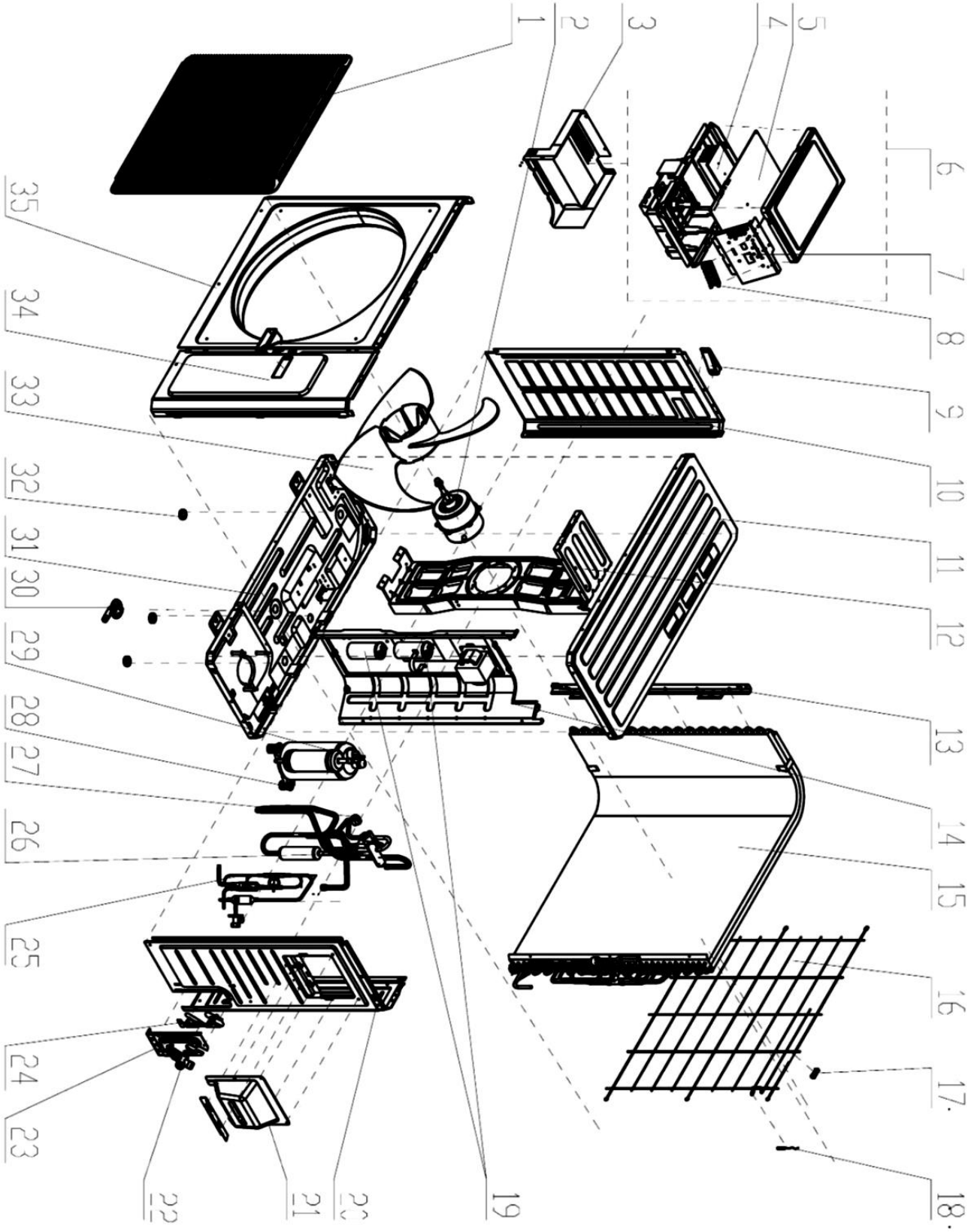

15.14 Spare part list of outdoor Unit: YDDE024

NO.	Part Code	Part Description	qty
1	G22415003	Front Grill	1
2	G1501403402	Fan Motor	1
3	G20113027	Electric Box (Fireproofing)	1
4	G49010252	Radiator	1
5	G30148864	Main Board	1
6	G02613662	Electric Box Assy	1
7	none	Terminal Board Support sub-assy	1
8	G420111041	Terminal Board	1
9	G26235401	Left Handle	1
10	G01305043P	Left Side Plate	1
11	G01255006P	Top Cover	1
12	G01705025	Motor Support Sub-Assy	1
13	G01175092	Condenser support plate	1
14	G01233164	Clapboard Assy	1
15	G01163917	Condenser Assy	1
16	G01475013	Rear Grill	1
17	G26115004	Wiring clamp	1
18	G3900030901	Temperature Sensor	1
19	none	Capacitor CBB61	0
20	G0130504401P	Right Side Plate	1
21	G26235001	Big Handle	1
22	G07133157	Cut-off Valve	1
23	G0171501201P	Valve Support Sub-Assy	1
24	G01365435P	Baffle (valve support)	1
25	none	Capillary Sub-assy	1
26	G03073144	4-Way Valve Assy	1
27	G4300040045	Magnet Coil(4-way Valve)	1
28	G76710247	Compressor Gasket	3
29	G00105249G	Compressor and Fittings	1
30	G06123401	Drainage Connecter	1
31	G02803255P	Chassis Sub-assy	1
32	G06813401	Drainage Hole Cap	3
33	G10335009	Axial Flow Fan	1
34	G01305086P	Front Side Plate	1
35	G01435004P	Cabinet	1

16. SERVICING

16.1 Servicing procedure of indoor units

16.2 Servicing procedure of outdoor units

APPENDIX

Airwell

SERVICE MANUAL
HDDE009/012/018/024

Airwell
Residential